MAINSAIL CONSTRUCTION

MANUAL

Yachting Systems of America, LLC.

1041 West 18th Street, Unit B-104
Costa Mesa, California 92627 USA

Dougall Johnson
Customer Service / Technical Support
Phone: 949-642-9430 / 949-500-6923 cell
Fax: 949-642-9550
email: djohnson@furlboom.com

FURLBOOM MAINSAIL CONSTRUCTION MANUAL

These instructions should be read in conjunction with attached Illustrations.

TABLE OF CONTENTS

ILLUSTRATIONS

Please refer to the following illustrations when reading the instructions that follow:

1)	Design Sheet	Illustration 1
2)	Batten Layout Dimension Sheet	Illustration 2
3)	Illustration Key Sheet	Illustration 3
a)	Luff Length Reduction and Head	Illustration 4A and 4B
b)	Original “P” and P Modified “PM”	Illustration P-PM
c)	Boom Location Measurements	Illustration PV
d)	Tack and Cutback	Illustration 5A and 5B
e)	Batten Pocket Aft End	Illustration 6A
f)	Clew	Illustration 6B
g)	Batten Pocket Forward Ends	Illustration 7A, 7B, and 7C

NOTE: that Illustrations 2 refers to dimensions calculated in “battenmaster.123/xls” supplied separately. This spreadsheet contains P and E dimensions provided to YSA. It the sailmaker's responsibility to double check the P and E dimensions.

The illustrations are located at the back of this document.

FURLBOOM MAINSAIL CONSTRUCTION MANUAL

These instructions should be read in conjunction with attached Illustrations.

INTRODUCTION

Furlboom is a unique product that accomplishes mainsail furling and reefing in a number of patented and specialized ways. The Furlboom is described in some detail in the GENERAL DESCRIPTION OF THE FURLBOOM section, which is found at the end of this document.

Reading this section first is recommended for those who are not familiar with the product. For those who are familiar with Furlboom, the instructions that follow are intended as a checklist, which describe the key components of the sail.

If you have questions please contact Dougall Johnson at customer service at 949-642-9530 / 949-500-6923 cell or email them to *dougall@furlboom.com*. The document that follows has been broken down into sections and is in an outline format to facilitate identifying the subject matter you may have a question on.

SAIL CONSTRUCTION ISSUES SPECIFIC TO FURLBOOM SAILS

1) Generally, the sail should be constructed in terms of shape and design the same as a **conventional mainsail**. ~~Sail shape photos are available and attached to this document and or available at www.furlboom.com.~~

2) The **dimensions** of the sail are normally slightly different than a conventional sail depending on where various components of the Furlboom system are installed. The "P" and "E" dimensions need to be modified either by measuring the installed system or by calculating the modifications that result from the installation.

3) The **unique** design details below do the following:

   a) They affect the way the sail attaches to:

      i) The mast foil and PVC insert (attached to the mast) at the luff.

      ii) The luff roller feeders.

      iii) The mandrel and track located inside of the boom.

   b) They affect the way in which the sail rolls onto the mandrel and into the boom.

   c) They cause both the #3 and #4 battens to avoid contact with the roller claw at their enlarged bulky leech ends (including the batten pocket) when the sail is rolled in or out.

The roller claw needs to pass over the #4, #5, and #6 battens and batten pockets (the bottom three) where they are as flat as possible, and then pass between the #3 and #4 bulky batten pocket ends. The leech of the sail needs to slope towards the mast enough to allow this to happen. Excessive roach at the clew must be avoided.

d) They are intended to keep sail thickness at a minimum in key areas of the sail where build up might otherwise occur when the sail is rolled completely into the boom, and the claw within the boom.

4) Furlboom sails can generally be made one full Dacron cloth weight **lighter** than a conventional sail with reef points because the sail is rolled for storing, is not damaged by reef line crushing, and is held along the entire foot when reefed.

a) **Sailcloth weight**:

i) Yachts in the 30 to 40 foot ranges can use a Dacron cloth weight between 5.5 and 6.5 ounce for predominantly light to medium conditions.

ii) Yachts in the 40 to 50 foot ranges can use a Dacron cloth weight between 7.5 and 8.5 ounce for predominantly light to medium conditions.

iii) Yachts in the 50 to 60 foot ranges can use a Dacron cloth weight between 9.5 to 10.5 ounce for predominantly light to medium conditions.

iv) For predominantly medium to heavy wind conditions, 1 ounce heavier is should be considered and may require a larger boom size.

v) If a radial sail design is used, it is possible to use a lighter cloth in the forward panels (luff area) graduating to a heavier cloth on the aft panels (leech area).

vi) **Important note:** Heavier cloth weights than those recommended in i), ii), and iii) above increase the rolled diameter of the sail and affect the required boom size. As such, sailcloth weights outside of these recommendations (including iv above) need to be specified before the boom is ordered or fitted.

b) **Exotic sailcloths** may be used with Furlboom. Longer sail shape and life can be expected because the sail is rolled for storage and is not crushed by reef lines.

c) These suggestions are only a guide and the final decision rests with the individual sail maker.

d) The cloth used in the **two-ply leech** areas must be the same weight as the cloth used in the main sail area.

The second ply must be attached on the port side and be under the leech tape at the edge of the sail.

The two-ply must be individual panels cut the same shape and bias as the larger main sail panels.

Other instructions regarding the two-ply areas of the sail follow and must be adhered to.

Do not use more than two-ply in the leech.

e) Use **heavy leech tape**.

f) Keep **patch reinforcement thickness** to a minimum at the tack to assist rolling of the sail.

CONSTRUCTION DIMENSIONS, TERMS, AND FORMULAS

1) Furlboom mainsails normally have different "P" and "E" dimensions than the existing mainsail or design plan. The dimensions are affected by where the various components of the Furlboom are installed.

There are two ways to determine the **"P"** and the **"E"** that the sail maker needs in order to make the Furlboom sail:

Physically measuring the installed Furlboom system

and/or

Mathematically calculating the sail dimension modifications that are expected to result from the installation of the Furlboom system.

Measuring the actual installed system is strongly recommended. The mathematical method is desirable as a double check to an actual measurement or can be ignored if physical measurements are taken and confirmed. It is important to remember that a Furlboom sail will normally have a different "P" and "E" dimension than the original sail design and that the sail should never be cut to tall or to long at the foot. Both subjects are explained below.

2) Hereafter in these instructions:

"P" and "E" are used to reflect the design measurements of the vessel or the measurements taken from the rig prior to the installation of the Furlboom.

"EM" stands for **"E Modified"** and "PM" stands for **"P Modified".** The "Modified" dimensions reflect the dimensions of the rig after the Furlboom is installed.

3) The Furlboom system has several **major components** that are attached to the mast. A series of mast foils are attached to the back of the mast most of its entire length above the boom. These foils cause the luff of the sail to standoff the mast and shorten the foot of the sail. The location of the top foil and the top sheave attached to it affect the "P" dimension. The location of the installed Furlboom boom and its mandrel also affect the "P" dimension. Finally the characteristics of the halyard splice affect the hoist and accordingly the "P".

"EM" is a relatively easy number to determine as it is only affected by one adjustment. However "PM" is sensitive to a number of issues listed below including where the boom is mounted on the mast in relation to the bottom Black Band, where the top foil sheave is located in relation to the upper Black Band, and the physical characteristics of the halyard used with the system.

4) The sail maker should **confirm** "PM" and "EM" by measuring the installed Furlboom rig whenever possible if he was supplied the dimensions or if mathematical calculations were used to determine the modified dimensions.

Confirmation of the "before" "P" and "E" should be done by measuring the rig if mathematical calculations are to be used to determine the "after" "PM" and "EM" dimensions.

5) The purchaser or their representatives have provided the measurements shown on the "**Furlboom Batten Layout Dimension Sheet**" normally supplied with these instructions. They are **responsible** for them and are expected to verify them. These dimensions and the "calculated" dimensions resulting from them may not accurately reflect post Furlboom installation dimensions if any one of several dimensions is incorrectly provided or input.

The "Furlboom Batten Layout Dimension Sheet" calculates "EM" and "PM" dimensions based certain variables, as well as the dimensions describing the batten pocket location. The spreadsheet initially assumes that the top of the Furlboom top foil and sheave are located at the same height as the upper Black Band and the that the top of the Furlboom mandrel is located at the lower Black Band. The spreadsheet requests variances in the location of the top foil sheave and mandrel in relation to the Black Band(s). If these variance are properly

measured and input the spreadsheet will perform the calculations described below. Any dimensions provided on the spreadsheet DO NOT take into account fabric stretch.

6) **Calculating "EM"** - The "EM" dimension is best described as follows:

Normal "E" as measured using the existing boom or design plan, from the back of the mast to the clew of the sail

Less: Foil Dimension (see below)

Equals: "E Modified" or "EM"

To determine the "EM" dimension: Subtract 55mm (2.17") from the Normal "E".

"E" – 55mm = "EM" or "E" – 2.17" = "EM"

7) In determining how tall to make the sail the sail maker needs to know the actual hoist of the sail after the Furlboom has been installed. Sailboats have a design specification for "P". This design specification needs to be modified when cutting a Furlboom mainsail to equal "PM".

The design "P" needs to be modified to by those things that **affect the hoist** of a Furlboom mainsail which include:

a) The actual location of the installed Furlboom, and its mandrel in particular in relation to the lower Black Band;

b) The actual location of, and the height restrictions described below, resulting from the installation of the Furlboom's top foil and sheave in relation to the upper Black Band;

c) The construction of the splice that retains the halyard shackle; and

d) Normal stretch considerations.

It is recommended that the maximum hoist be determined by physically measuring the maximum height that an installed halyard and shackle are able to rise above the mandrel of an installed Furlboom. In these instructions we refer to this dimension as "P Modified" = "PM" because "PM" is normally different than the design specification "P".

Some of the sail shape control features of a Furlboom mainsail, which are manipulated at the foot of the sail, are only fully effective if the mainsail is **NOT to tall**. Remembering that sails stretch, it is better to error on the side of being to short rather than to tall.

8) If “PM” is mathematically **calculated** , the relationship between the design "P" or "Black Band" dimension and the "P Modified" = “PM” that the sail maker should use when designing the mainsail is best described as follows:

Normal "P" as measured using the existing hoist or design plan, from the top of the existing boom (lower Black Band) to the upper Black Band

Normally

Less: Top Foil Installation Deductions at the masthead (see Illustration 4 and the description below) as it may be modified depending on the actual location of the installed top foil and sheave relative to the upper Black Band.

Adjusted for: Foot Location, which is the relative position of the top of the installed Furlboom mandrel to the actual position of the top of the existing boom or design plan (lower Black Band).

Adjusted for: Halyard restrictions (see below).

Equals: "P Modified" or "PM".

a) **TOP FOIL DEDUCTIONS**: The top foil and sheave may be installed at any location on the mast but must allow for the minimum spacing(s) described hereafter. Illustration 4 shows the minimum spacing between the top foil sheave and the existing mast mainsheet halyard sheave. This spacing is an estimated minimum that allows the halyard to properly meet the top foil sheave after anticipating an offset masthead sheave. The actual location at which the top foil is installed determines the actual hoist as adjusted for the halyard splice (see below).

Illustration 4 also shows the <u>minimum</u> spacing between the top foil sheave and the head of the sail. The dimension is an estimate based on a typical halyard splice. The top foil sheave is encased in a housing that eventually prevents a spliced halyard from raising any farther.

The actual "Black Band" could be anywhere above or below the top foil mainsheet halyard sheave.

The amount deducted (or in rare instances, added) from/to "P" when determining "PM" should be based on the location of the upper Black Band relative to Illustration 4. See the Example below.

The location of the top foil and resulting "PM" is based on the Boom Series (model). Please check to determine the Boom Series number. The Series Number is embedded in the Furlboom Serial Number stamped into the inside bottom of the front of the boom as illustrated in the following examples:

YSAS4xxxxx	S4 indicates Series 4
YSAS3xxxxx	S3 indicates Series 3
YSAS35xxxxx	S35 indicates Series 3.5 (use Series 4)
YSAS2xxxxx	S2 indicates Series 2

Example: Assuming the upper Black Band was coincidentally located in the top of the top foil sheave (see Hypothetical Location of Black Band in Illustration 4), and the top of the mandrel was located at the lower Black Band, then the following calculation would occur on a Series 4 boom to determine the mathematical "PM":

"P" = "Black Band" dimension

Less: 2" = height of top foil sheave

Less: 7" = "A" dimension in Illustration 4 from table for Series 4 boom.

Equals: "PM"

Refer to illustration 4A and P.

b) **FOOT LOCATION:** The design "P" has to be adjusted for any changes in the height of the sail resulting from the relative elevation of the installed Furlboom's mandrel when compared to the top of the existing boom or design plan (the bottom Black Band).

c) **HALYARD ISSUES**: The halyard shackle is normally attached to the halyard using a splice, which typically enlarges the diameter of the line. An enlarged and long splice exceeding the "A" dimension in Illustration 4 may prevent the sail from being fully hoisted if the splice runs into the top foil sheave and binds. The top foil sheave opening accommodates a 10 mm (3/8") in diameter line. "PM" may need to be further adjusted to compensate for this condition.

d) "PM" should normally not exceed "P" except in the most unusual circumstances.

e) SUMMARY: "PM" cannot physically exceed a hoist that brings the head of the sail no closer to the existing main halyard mast sheave than is shown in Illustration 4, less any additional reduction caused by the shackle splice in the halyard, irrespective the existing "P". The hoist is also affected by the relative position of the top of the Furlboom mandrel to the top of the existing boom or rigging plan (bottom Black Band).

f) SUGGESTED METHODOLOGY: Do the calculation described above and compared them to the actual measured hoist of an installed system and spliced halyard. **Error on the side of too short rather than too tall.**

9) NOTE: It is the responsibility of the sail maker to check that the "E", "EM", "P", "PM", and Backstay measurements on the boat and as shown on Illustrations 1 and 2, are correct.

SAIL STRETCH CALCULATIONS

1) The dimensions shown Illustrations 1 and 2 are maximum sizes and do not make allowance for sail stretch.

2) The following methods are suggested for deducting stretch:

a) Computer lofting programs that can calculate batten pocket angles off the luff can re-loft the sails with stretch deducted off the "PM" and "EM".

b) The stretch can be deducted from the top panel from the head to the top batten.

c) The stretch can be deducted from the "PM" and "EM", and the revised measurements sent to YSA for recalculation of the measurements on Illustrations 1 and 2 which are listed on the "Furlboom Batten Layout Dimension Sheet", which is an Excel or Lotus spreadsheet.

d) NOTE: Foot length ("EM") and tack cutbacks must be accurate with MINIMUM allowance for stretch. Excessive deductions for stretch will affect the operation of the "auto outhaul" function.

SAIL DETAILS

1) The sail shape is basically the same as a **conventional mainsail design**.

2) Use broad seaming for sail shape.

3) Keep patch thickness to a minimum at the tack to assist the rolling of the sail.

4) The sail material and reinforcement (patches) under the luff tape must finish 15mm (5/8") from luff rope (boltrope) in order for the sail to pass through the feeder properly.

5) Do not make the sail overly full because it will crease when rolled into the boom.

6) **Luff**:

a) **Luff Curve**:

i) Use as little luff curve as is possible in the sail design.

ii) The luff curve must not exceed mast prebend plus 25% or .0025 (.25%) multiplied by the luff length. (whichever is less) However, a 25mm (1") curve over mast bend (if any) can be used.

iii) If mast is straight a 25mm (1") luff curve can be used.

iv) When taking the above measurements, ensure that the mast is not inverted and that the rigging is properly tensioned so that the mast is at least straight or meets the design specifications of the boat.

v) NOTE: The luff curve dimensions referred to above are the 3D (fanned) luff curve, and not 2D. The 2D luff curve is much greater.

b) Luff tape and luff rope (**bolt rope**):

i) Use only hard cored luff tape boltropes for the luff rope.

ii) The finished size of the luff rope and tape should be 7.0mm (.275") minimum to 7.5mm (.295") maximum in order to slide easily in the 8.0mm PVC insert. A standard off the shelf #7 single line boltrope is perfect for our needs.

iii) Use the sample of the PVC luff groove and alloy foil provided to insure that the boltrope fits properly prior to sewing it into place on sail.

iv) Do not use luff tape with double ropes. Remove second rope if necessary.

v) You can use Teflon type luff tapes.

vi) Do not sew the luff tape on the sail too tightly.

vii) Tape should be similar in tension to luff of sail and be able to stretch.

viii) The luff boltrope must be 25mm (1”) longer than luff tape at tack to allow for shrinkage. Extend the rope beyond the lower end of the luff tape. Refer to Illustration 5A.

ix) The lower end of the luff tape must end no more than a maximum of 350mm (14”) above tack of sail. Refer to Illustration 5A.

x) Use a fibreglass rod (or Aluminum) to replace the boltrope in the luff at the head of the sail. Refer to Illustration 4B.

(1) The rod should be 150mm (6”) long and the same diameter as the luff rope.

(2) The upper end of the fibreglass rod is to be flush with the top of the sail.

xi) On some high load sails, such as catamarans, a metal head slide should be used to replace the fibreglass rod. This stainless steel slide and a detail drawing for the sail attachment are available from YSA or through your dealer.

xii) Extend the luff tape 25mm (1”) past the top of the sail and the rod. Refer to Illustration 4B.

Cut this extension at an angle sloping to the aft and stitch it to allow easy entry into the luff feeder and luff foil. (We use a Spinlock #RF/MA prefeeder)

7) **Tack Cutback** (refer to Illustration 5B) Due to the dimensions of the drive box, u-joint, and slip ring a cutback of 4 inch is required starting 14 inches above the tack ring. Put a one-inch hollow along this line.

8) **Foot** (refer to Illustration 1):

a) The sail foot design is essentially a loose-footed sail with an added furling flap to attach it to the mandrel.

b) The **foot boltrope** should run parallel to a straight line between tack and clew.

c) The foot boltrope is a single rope with a maximum finished size of 4mm (.157”). Use tape for Hood “Gemini system size 8 & 12” (Their small one) or similar.

9) **Leech**:

a) The maximum **roach** is the lesser of either 20% of E or 10% of the leech length.

The roach cannot be compressed into the bottom of the sail (refer to paragraph 2c in "Sail Construction Issues Specific to Furlboom Sails" section on page 1 above. The sail needs to roll onto the mandrel so that the claw passes between the 3 and 4 batten pocket ends when the battens are laid out as required by these instructions.

b) The leech is **two-ply**. Refer to Illustration 1.

i) The cloth used in the 2 ply leech areas is to be the same weight as the cloth in the main sail area.

ii) The second ply must be attached on the port side and under the leech tape at the edge of the sail.

.

iii) The two-ply must be individual panels cut the same shape and bias as the larger main sail panels.

iv) The forward edge of the lower leech two-ply is precisely positioned in relation to the location of the claw. The claw is located at dimension "EM" minus "V". "V" = 28% of "EM".

v) The forward edge of the two-ply lower leech should be constructed so that it tilts forward so that when the sail is rolled the accumulation of sailcloth is dispersed forward to prevent cloth build up. The two-ply should wind slightly forward as the sail is rolled onto the mandrel.

vi) The bottom forward edge of the two-ply lower leech section begins at 33% of "EM" measured forward from the clew. It runs upwards in a straight line to intersect with the 200mm (8") upper leech two-ply cloth.

vii) It normally continues in a straight line above batten #4 to intersect with the upper leech two-ply cloth at batten #3. Batten #4 is the deep reef position, thus the two-ply extends above it for added strength.

viii) In the event that the straight line described in the proceeding paragraph does not produce adequate forward tilt to prevent cloth build up, move the end of the straight line above batten #3 until it does, and intersects with the upper leech two ply.

ix) Above the lower leech, continue the two-ply upper leech to the head patches. The upper two-ply leech should be 200mm (8") wide.

c) Treat the upper leech of the sail as a conventional sail.

i) Avoid freeing the leech in the mid to upper area (as is done on some racing sails to allow for twist off).

ii) Conversely, do not overly tighten the leech. Treat the sail as a normal sail.

d) The leech line must be on starboard side of sail under leech tape. The leech line exits the tie offs on starboard side of the sail. It is preferable to use eyelets (on starboard side of sail) to tie off the leech line. Metal or plastic cleats may be used but must be of a smooth design and no longer than 38mm (1 1/2").

10) **Rings**:

a) The rings located at the tack and clew should be an external ring attached with vertical, diagonal and horizontal webbing strips. Refer to Illustrations 6B and 6.

b) Head ring (refer to Illustration 4B):

i) Use an external halyard ring (as in the tack and clew) in the head to minimize thickness and rigidity, to allow the sail to roll completely into the boom. Use adequate reinforcement, e.g. webbing down the luff and the leech.

ii) The ring and webbing must be a minimum of 20mm (.75") away from the aft edge of the luff boltrope to clear the feeder.

iii) Do not use a headboard.

BATTENS, BATTEN POCKET DESIGN, and GUIDE PADS

1) All sails must have **six battens**. All six battens need to be properly positioned to allow battens to properly roll past the claw.

2) Battens #1 to #5 are **evenly spaced** at the luff at 1/6 of the luff. Refer to Illustrations 1 and 2.

3) The **bottom batten** (#6) is in a unique location both vertically and in terms of its horizontal location. See illustrations 1 and 5B.

4) **Batten angle** is critical. Maintain the batten angles (dimensions) shown in the illustrations to allow the battens to roll into the boom properly and level. Refer to Illustration 2.

5) Batten pockets must be on **starboard side** of sail only.

6) Both the battens and the pockets must end at the **leech**.

   Battens must not extend beyond **leech** of sail. Refer to Illustration 8.

7) The **forward ends** of the batten pockets should end 20mm (3/4") from the aft edge of the boltrope to allow for the stitching and fitting of the guide pads, and still maintain a 15mm (5/8") gap to the luff rope in order to provide 5mm (3/16") clearance for the feeder.

   a) Refer to Illustrations 7A, 7B, and 7C for the design of the forward end of the batten pockets battens #1through #5.

   b) Refer to Illustrations 5B for batten #6.

8) All batten pocket ends terminate on the **luff** except batten #6. Battens #1 through #5 must be fitted with a guide pads on both sides of the sail. The guide pads prevent the batten pocket ends from catching under the feeder. They cause the ends of the battens to pass easily past the feeders into the PVC track.

   a) There are **two designs**. The preferably design is made of webbing (see Illustration 7B). The alternative design is made from luff tape (see illustration 7C).

   b) The forward edge of the guide pad must be <u>exactly</u> 15mm (5/8") from the inside (aft edge) of the luff rope on both sides of the sail. Refer to Illustration 7A.

   c) The forward edge of the guide pads in both designs (includes the bound rope in Illustration 7C) needs to be *hand stitched*. The stitching needs to go through the forward edge of the guide (including the rope) on both sides of the sail so that the forward edge is firmly attached to both sides of the sail. Stich along the forward edge, not over it, so that the feeder rollers do not come in contact with the stitching (in order to prevent wear).

9) The aft end of the batten pockets should be a Velcro internal design with a maximum length of 200mm (8"). Refer to Illustration 6A for the design of the aft Velcro ends.

10) Keep the ends as flat and smooth as possible to avoid catching on the inside of the boom. Do not allow the batten or batten pocket to extend beyond the leach of the sail.

11) The **boom claw** is located at 28% of the Normal "E", measured forward along the sail foot from the clew. Refer to Illustration 1.

    a) The #4 leech batten pocket should be located aft of the boom claw rollers a minimum of 75mm (3"). In the case of a boom with a double claw, this dimension must increase to 175mm (7").

    b) The aft end of batten #3 should be located forward of the claw a minimum of 200mm (8"). In the case of a boom with a double claw, this dimension increases to 250mm (10").

    c) Typically, conventional sail designs would allow the batten packets to miss the claw. However, if they do not adjust batten pocket height and/or sail roach to achieve this so that none of the batten pocket Velcro ends passes over the claw and there is adequate distance between the claw and batten #3.

12) The forward end of **batten #6's** pocket finishes 200mm (8") short of luff. Refer to Illustration 5A.

13) **Battens** need to be the moderately stiff, flat fibreglass type, non ribbed and tapered.

    Battens suitable for Furlboom include:

    Blue Streak "OR" series

    Challenge Sailcloth East
    Vernon, CT
    Phone: 203-871-8030
    Fax: 203-872-0881

    Challenge Sailcloth West
    Costa Mesa, CA
    Phone: 949-722-7448
    Fax: 949-722-2961

GENERAL DESCRIPTION OF THE FURLBOOM

Furlboom's in-boom furling system is unique in a number of ways when its features are compared to both other types of in-boom furling systems, and also conventional slab/jiffy reefing (reef point) sails.

Furling is accomplished by rolling the sail around a mandrel (a round tube located inside the boom and running the length of the boom). A drive box mechanism is affixed to the back of the mast and drives the mandrel through a universal joint.

Furlboom is open at the forward end. Furlboom does not have a bulkhead in the forward end of the boom. The open end prevents jamming of the sail when the sail is rolled, and allows the sail freedom of movement to wind forward and aft along the mandrel, between the back of the mast (and drive box) and inside the boom itself.

The luff of the sail runs vertically up and down the mast in a one-piece PVC track.

> The PVC track is encased in a series of foils, which are aluminium extrusions that run up the mast offsetting the luff to the aft 65mm (2.56"). The offset is required because of the thickness of the drive box and the need to have the luff of the sail feed onto and off of the mandrel at approximately 88 degrees.
>
> The PVC track reduces wear to the luff tape of the sail. Furlboom uses angled roller feeders that guide the sail into the PVC track. The feeders are also designed to allow the batten pocket ends and their feeder guides to be fitted close to the luff rope to prevent the battens "hooking" to the windward side of the mast.

The Furlboom sail is essentially a loose-footed sail fitted with a flap running partially along the foot and attached to the mandrel. This flap assists the sail in its initial winding onto the mandrel; and also flattens the sail during the first few turns of the flap onto the mandrel.

Furlboom is fitted with an auto-rotation outhaul that tensions the foot of the sail when heading upwind and eases the foot of the sail downwind. This is achieved by a series of fixed cords fitted at the aft end of the boom and a slip ring (with 180 degrees of travel) at the forward end. As the mandrel is rotated, the first half a turn (180 degrees), the luff and tack of the sail remain stationary and the foot and clew of the sail are pulled automatically outwards (aft), similar to a conventional boom outhaul.

Furlboom is fitted with an internal roller claw located approximately 1/3rd forward from the aft end of the boom. This roller claw allows for the use a flexible mandrel. The roller claw does several things:

It prevents the flexible mandrel from being pulled out of the boom by the sail when it is under load.

Its most unique function however is that it allows for progressive sail shape flattening. As the sail winds upon the mandrel, it gradually gets thicker under the rollers on the top of the claw. As it does this, the mandrel, and the sail wound around it, is bent downwards in a curve.

This curving of the rolled up sail along the entire foot physically pulls the draft from the sail making the sail shape flatter. As more sail is wound onto the boom the thicker it gets under the rollers. The thicker the rolled sail gets, the more the mandrel bends. This results in the sail becoming progressively flatter the more the sail is reefed causing the sail area and its fullness to be reduced simultaneously.

The dimensions of the sail are dependent on a series of issues that are discussed in the instructions. Sailmakers should be aware that the design “P” and “E” are NOT normally the dimensions of a Furlboom sail and are dependent on how and where the various components of the Furlboom system are installed.

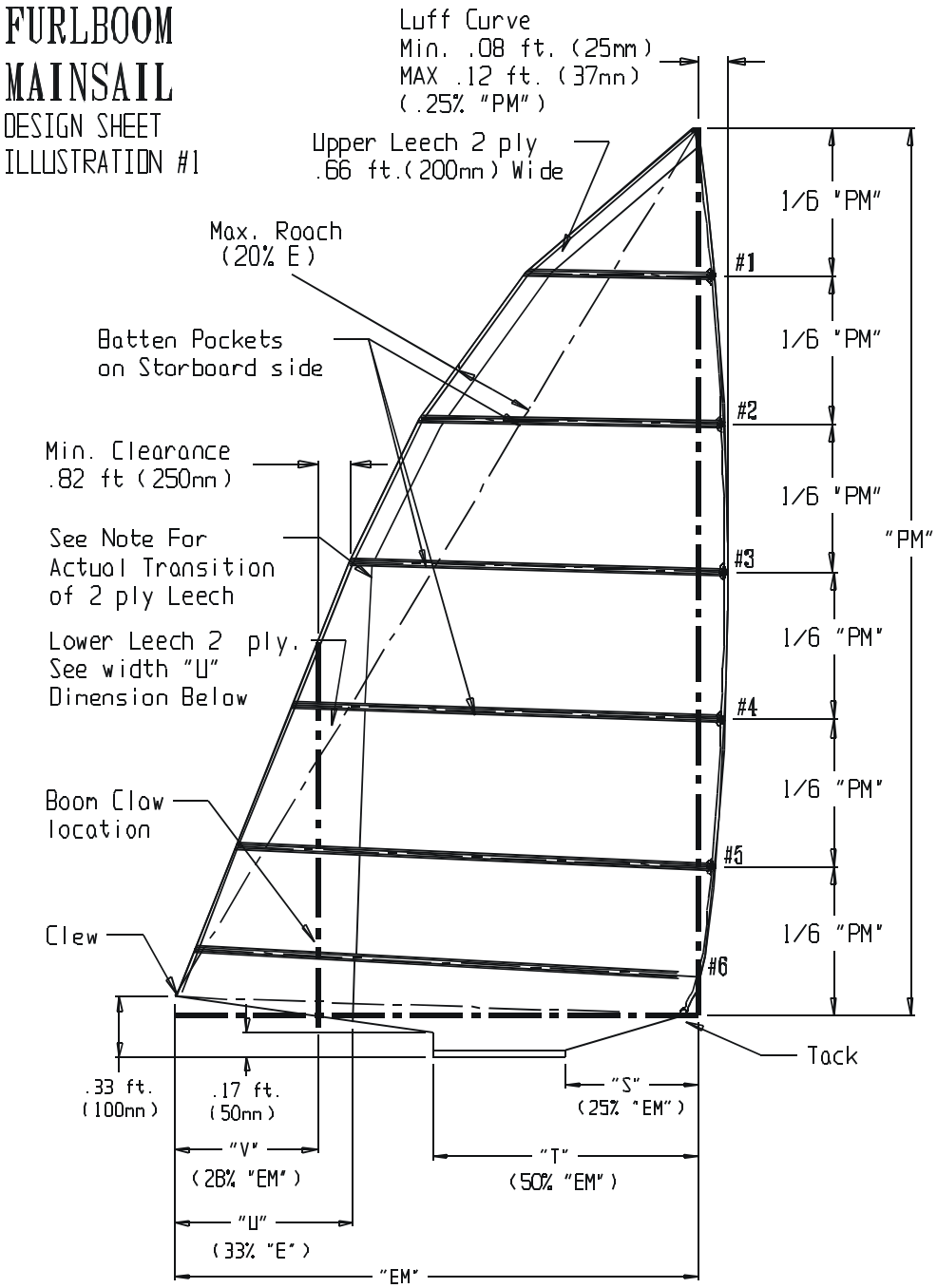

NOTES:

1. SEE DIMENSION SHEET FOR ACTUAL DIMENSIONS.

2. THIS DRAWING IS FOR A SPECFIC FURLBOOM AND BOAT APPLICATION.

3. THESE DIMENSIONS DO NOT REFLECT DEDUCTIONS FOR STRETCH, THE "PM" DOES REFLECT A REDUCTION FROM THE ORGINAL "P" FOR THE USE OF THE TOP FOIL SHEAVE. THE "EM" DIMENSION DOES REFLECT THE MAST FOIL REDUCTION OF 2.17 IN. FROM THE ORIGNAL "E" .

4 .DRAWING NOT TO SCALE. 2 PLY INTERSECTION SHOWN IS FOR ILLUSTRATIVE PURPOSES ONLY

8/2000

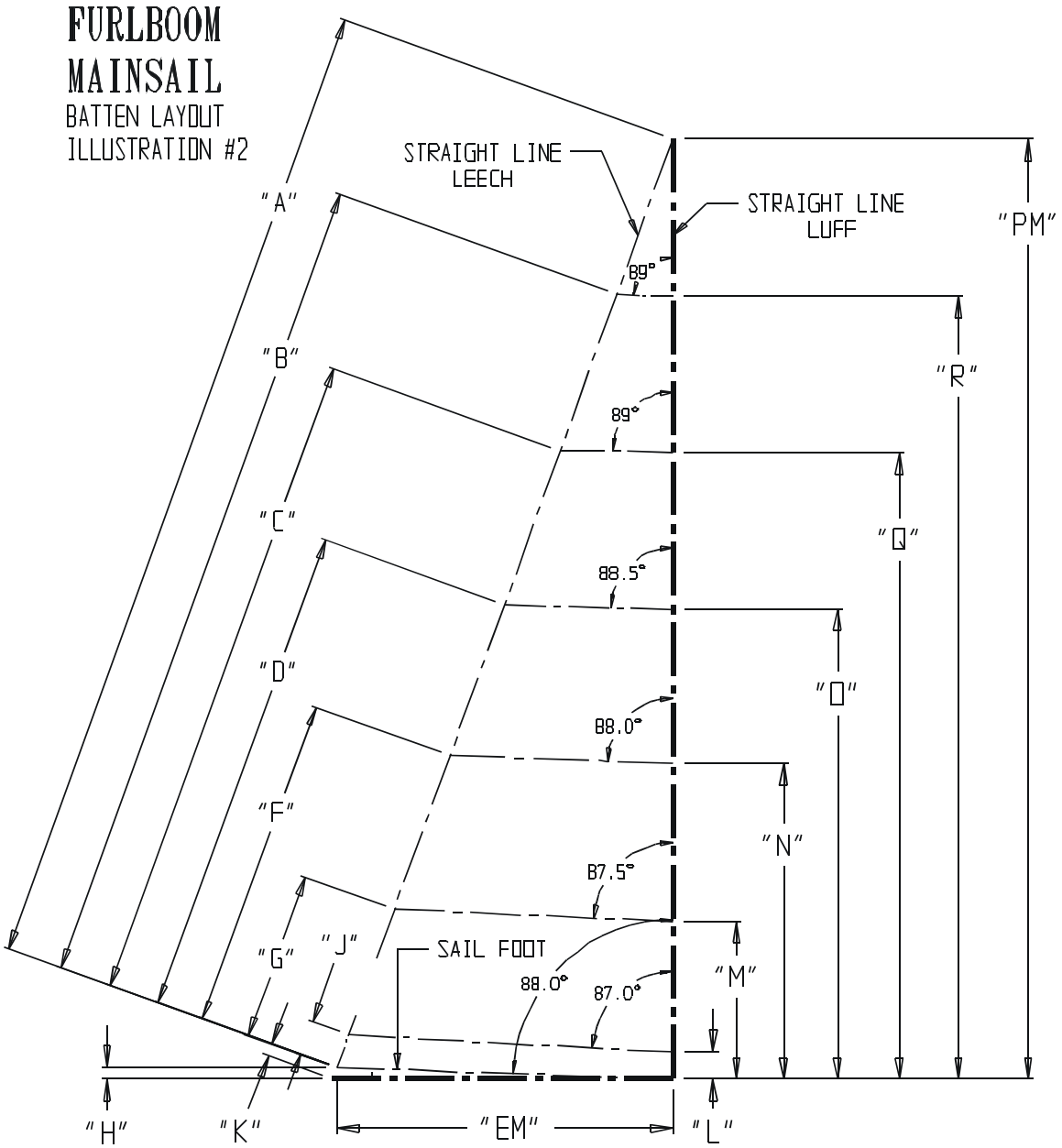

NOTES: 1. SEE DIMENSION SHEET FOR ACTUAL DIMENSIONS.

2. THIS DRAWING IS FOR A SPECFIC FURLBOOM AND BOAT APPLICATION.

3. THESE DIMENSIONS DO NOT REFLECT DEDUCTIONS FOR STRETCH, THE "PM" DOES REFLECT A REDUCTION FROM THE ORGINAL "P" FOR THE USE OF THE TOP FOIL SHEAVE. THE "EM" DIMENSION DOES REFLECT THE MAST FOIL REDUCTION OF 2.17 IN. FROM THE ORIGNAL "E" .

8/2000

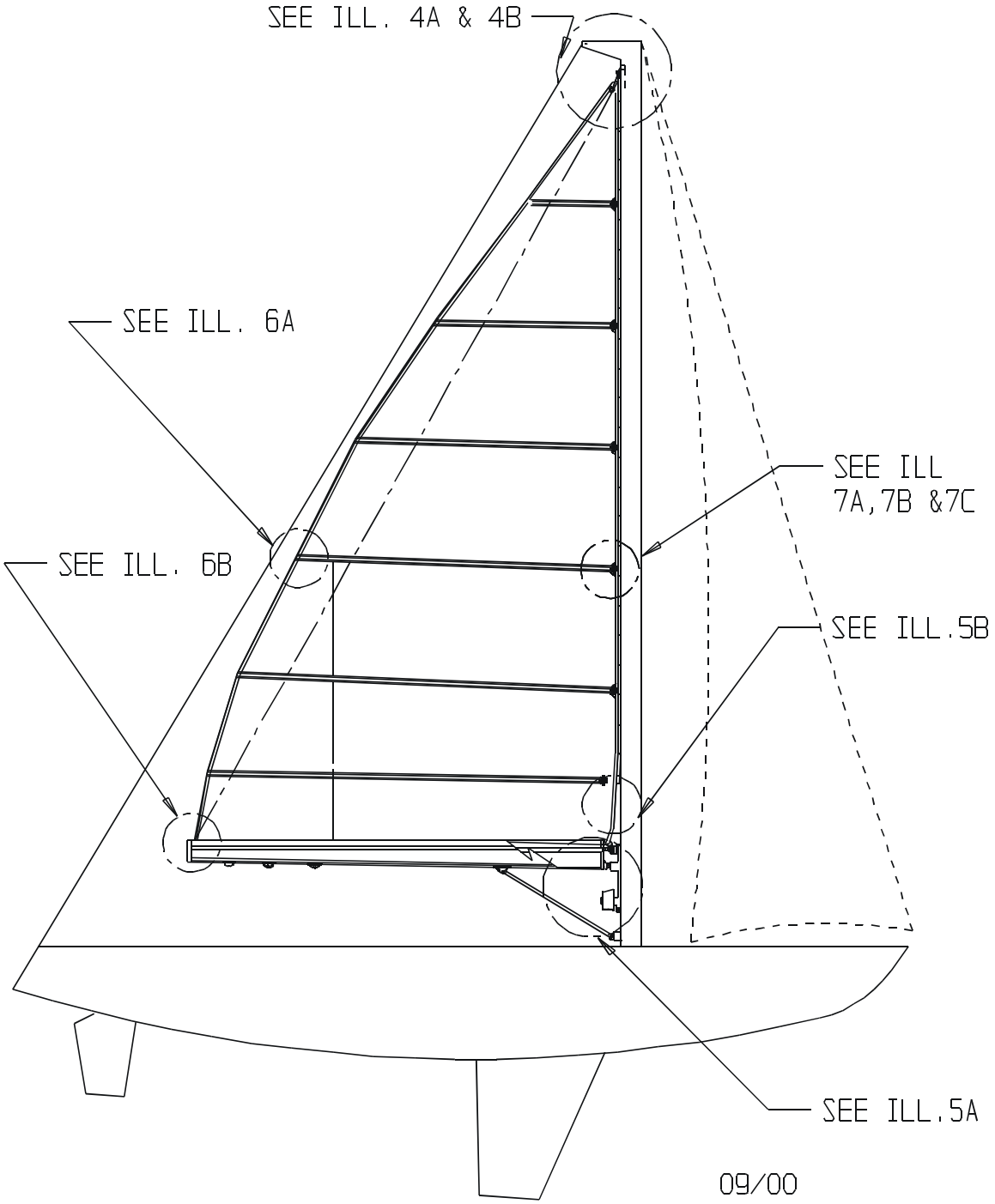
SEE ILL. 4A & 4B
SEE ILL. 6A
SEE ILL. 6B
SEE ILL
7A,7B &7C
SEE ILL.5B
SEE ILL.5A
09/00

FURLBOOM MAINSAIL

ILLUSTRATION #4A

BOOM SERIES	DIM "A" MIN.	
1 & 2	100mm	4.0in.
3	140mm	5.5in.
4	175mm	7.0in.
5 & 6	200mm	8.0in.

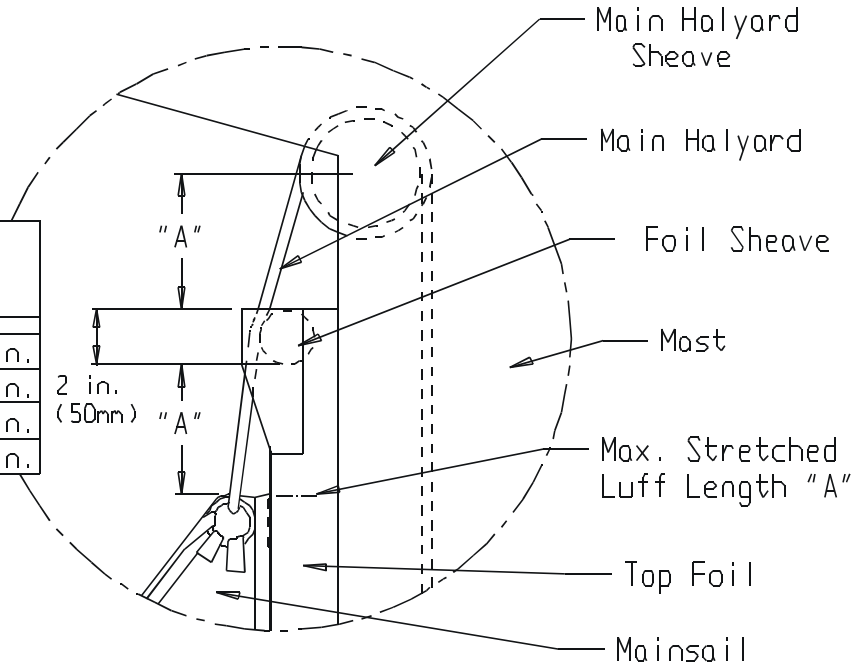

ILLUSTRATION #4B

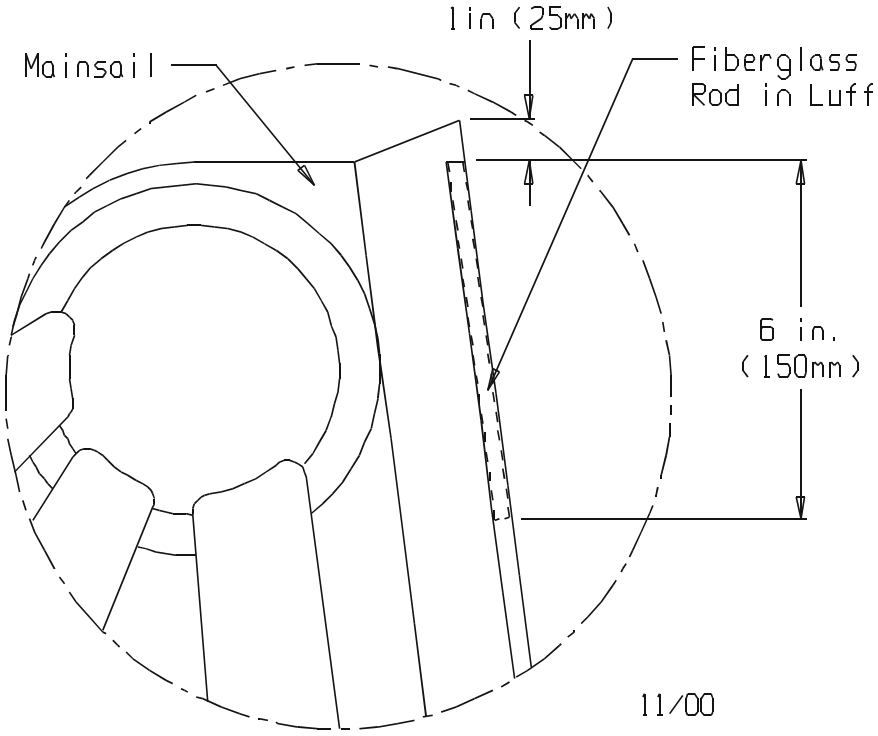

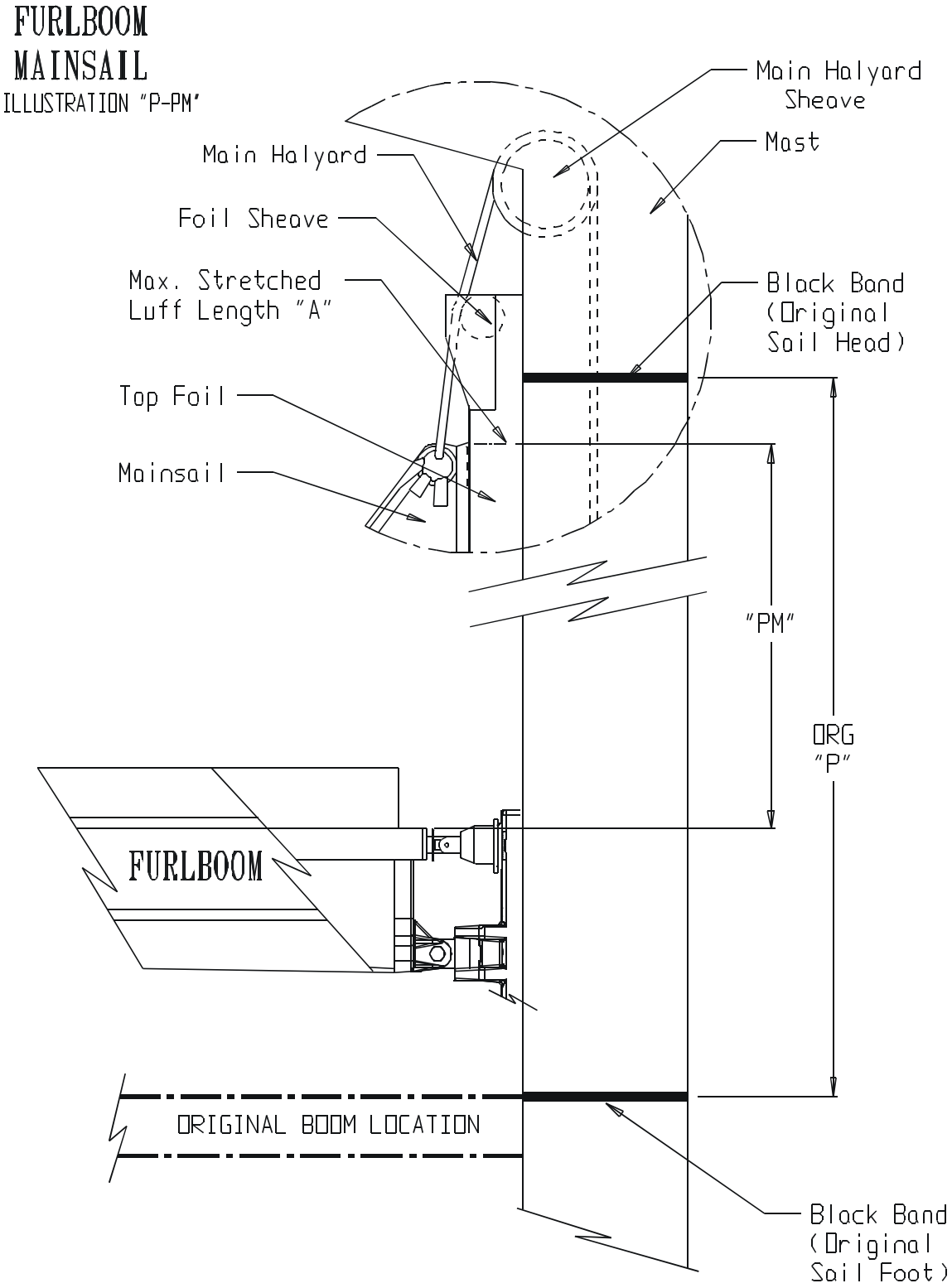
FURLBOOM
MAINSAIL
ILLUSTRATION "P-PM"
Main Halyard Sheave
Mast
Main Halyard
Foil Sheave
Max. Stretched Luff Length "A"
Black Band (Original Sail Head)
Top Foil
Mainsail
"PM"
ORG "P"
FURLBOOM
ORIGINAL BOOM LOCATION
Black Band (Original Sail Foot)

FURLBOOM MAINSAIL

ILLUSTRATION "PV"

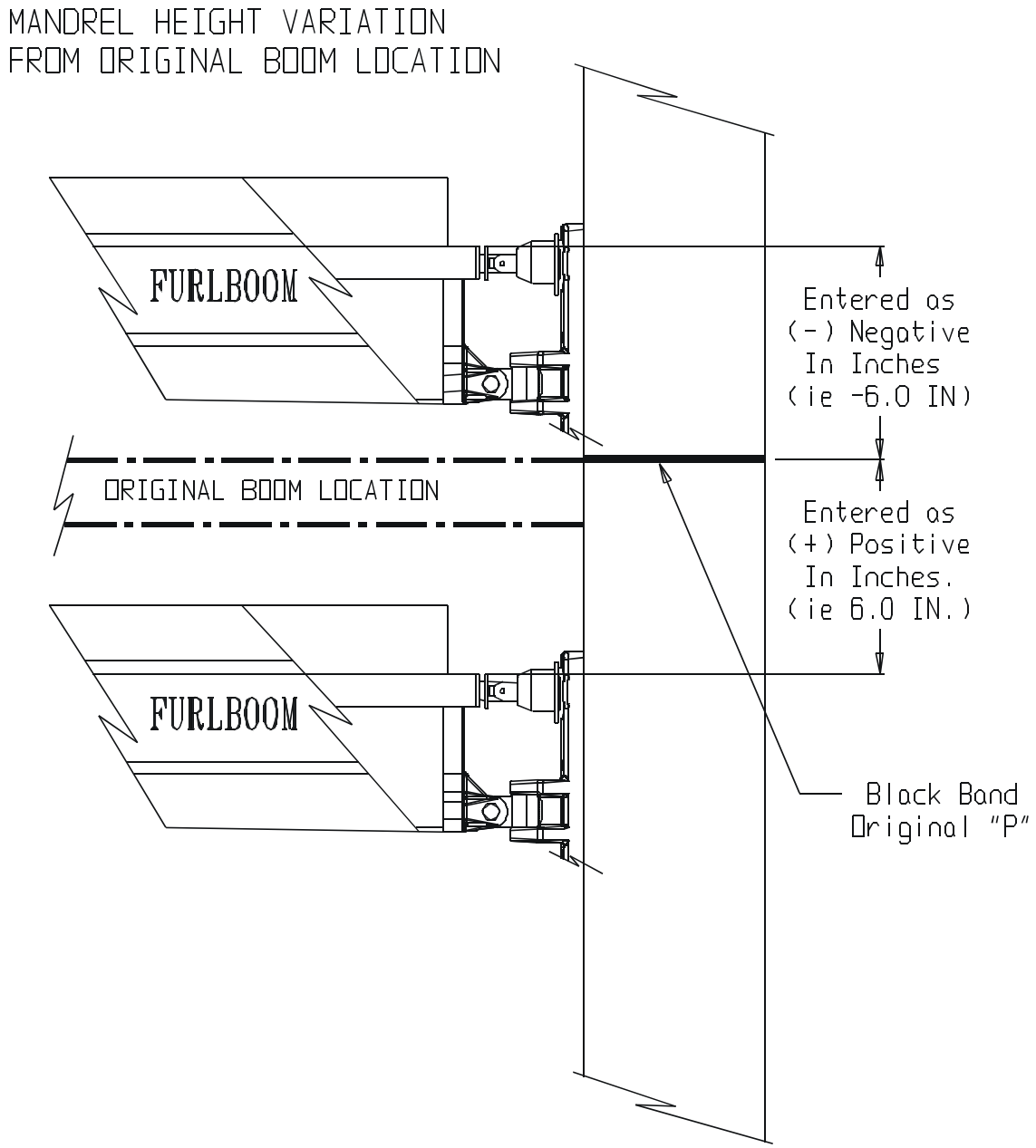

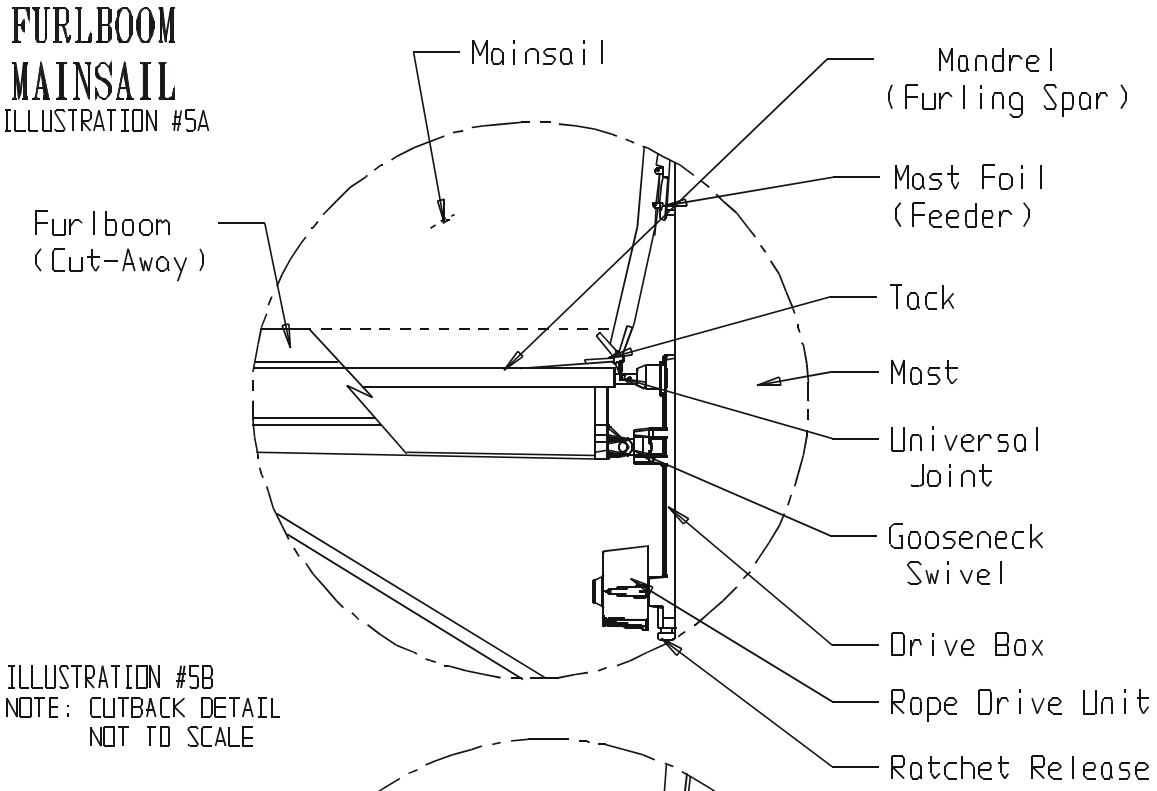
FURLBOOM
MAINSAIL
ILLUSTRATION #5A
Mainsail
Mandrel
(Furling Spar)
Mast Foil
(Feeder)
Furlboom
(Cut-Away)
Tack
Mast
Universal
Joint
Gooseneck
Swivel
Drive Box
Rope Drive Unit
Ratchet Release

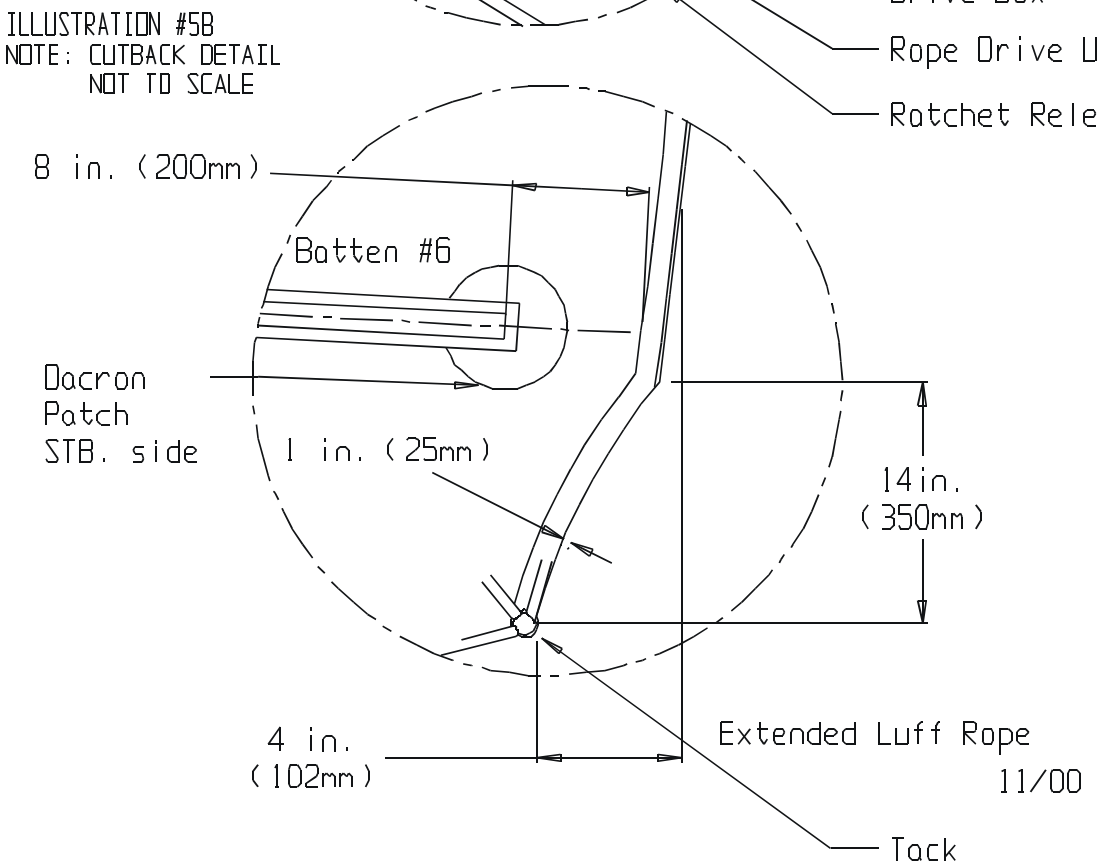
ILLUSTRATION #5B
NOTE: CUTBACK DETAIL
NOT TO SCALE
8 in. (200mm)
Batten #6
Dacron
Patch
STB. side
1 in. (25mm)
14in.
(350mm)
4 in.
(102mm)
Extended Luff Rope
11/00
Tack

39993333333999

FURLBOOM

MAINSAIL

ILLUSTRATION #6A
AFT BATTEN POCKET

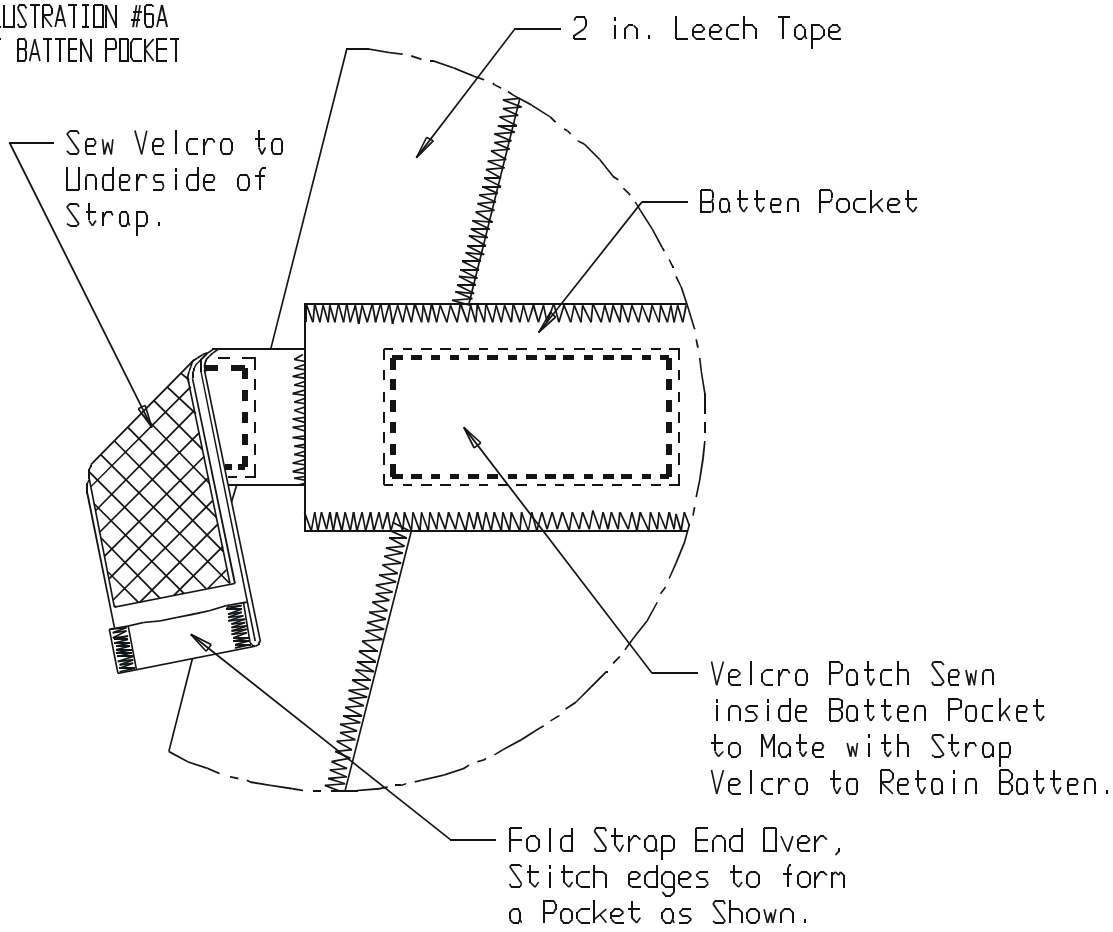

ILLUSTRATION #6B
CLEW

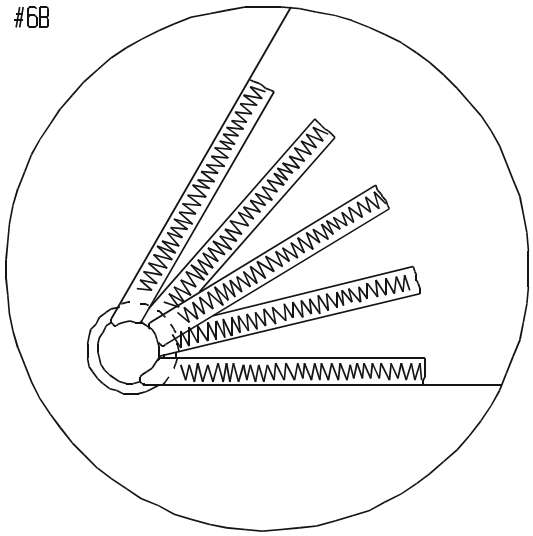

FURLBOOM MAINSAIL

DESIGN SHEET
ILLUSTRATION #7 &7A

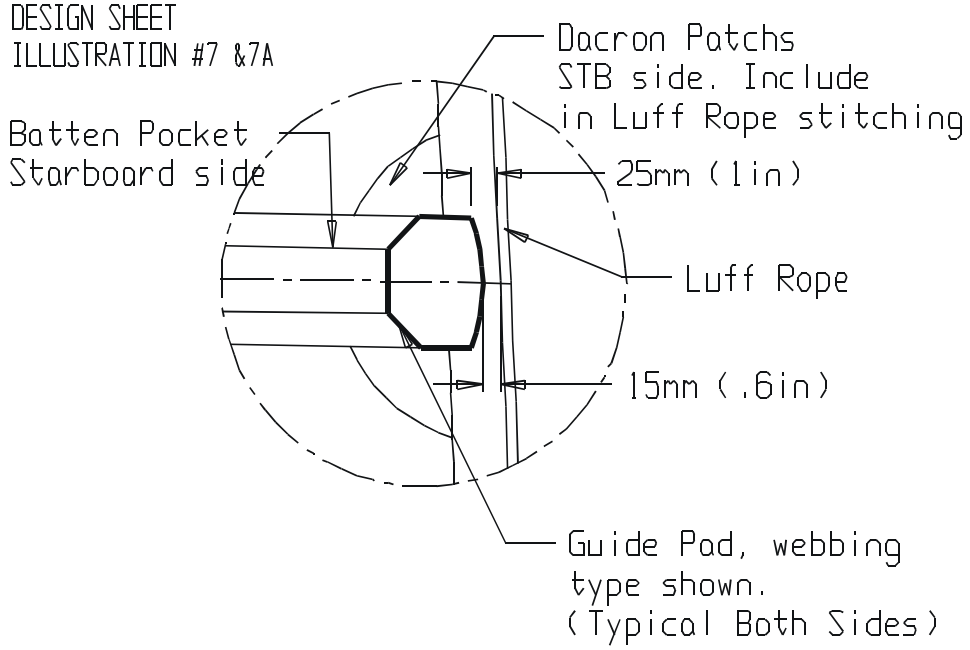

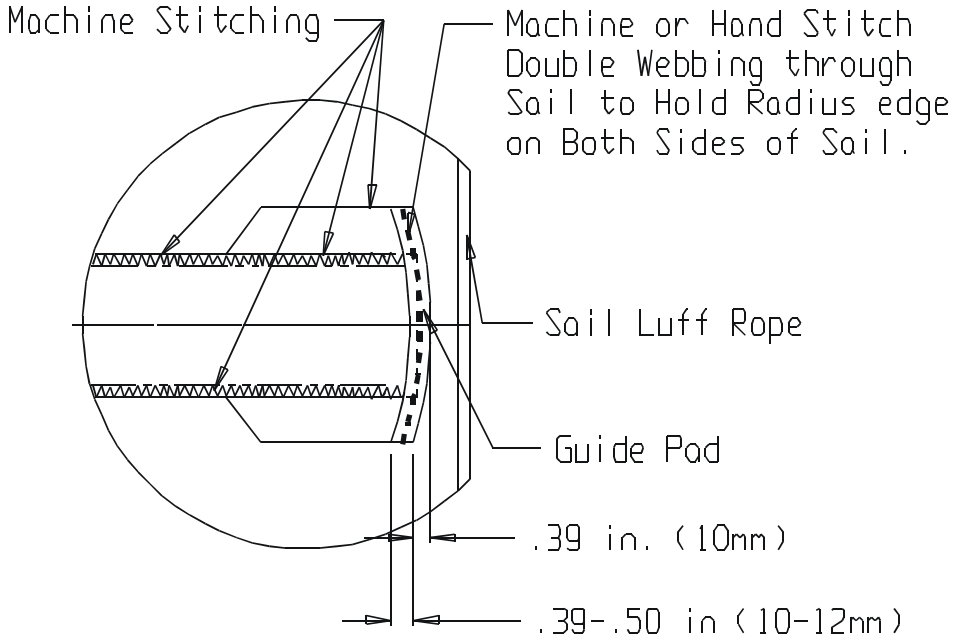

FURLBOOM MAINSAIL

ILLUSTRATION #7C

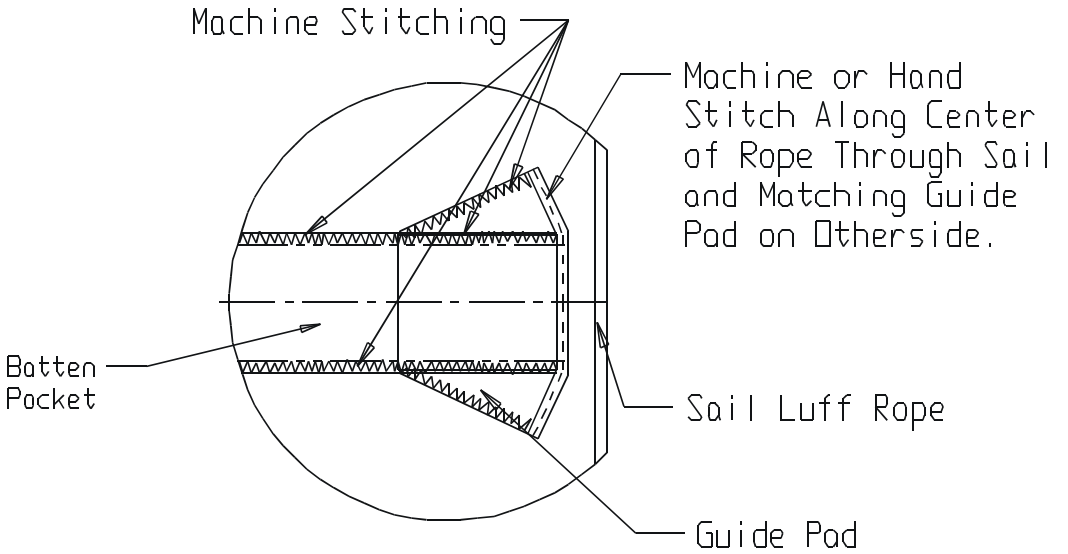

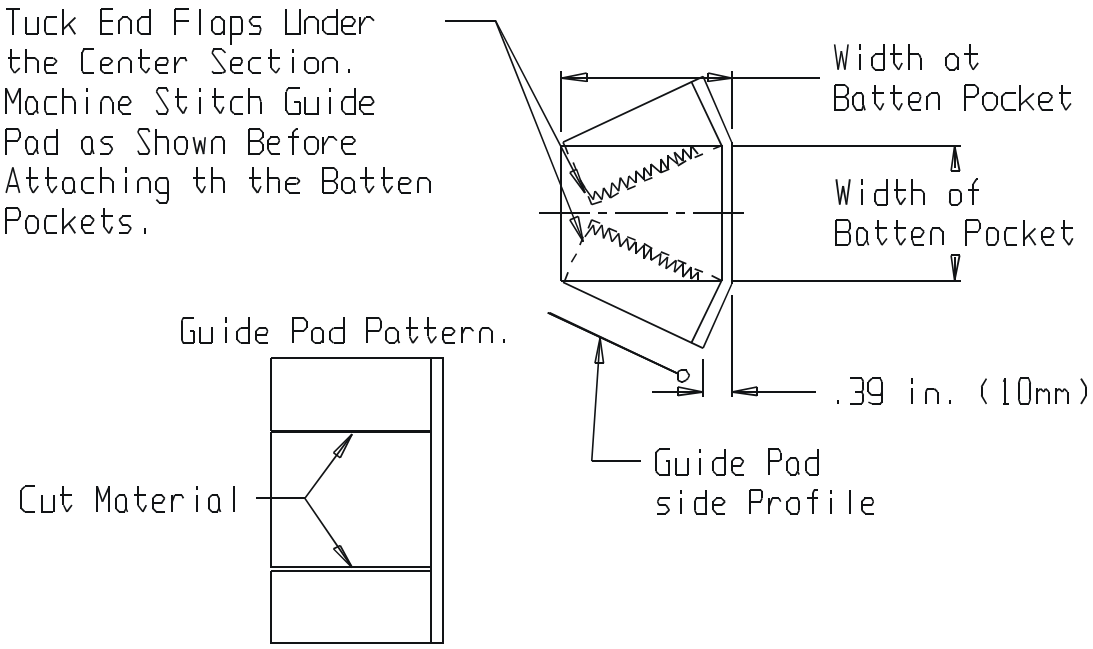

8/99