ITEM NO.	QTY.	PART NO.	DESCRIPTION	MATERIAL	STOCK SIZE
1	1	W-N40132SH-FRM18-001	BASE FRAME, SWING OUT HINGE W/ GAS STRUT	SEE BOM	SEE BOM
2	1	23TP40132SH18-1--001	COVER WELDMENT, J-ARM HINGE TREAD PLATE HATCH	SEE BOM	SEE BOM
3	1	50580023	GASKET TREAD PLATE	EPDM	8.73 FT
4	3	603-0011	J-ARM HINGE KIT	SEE BOM	SEE BOM
5	1	603-0001-AL	D-HANDLE KIT for TREAD PLATE ACCESS HATCH	SEE BOM	SEE BOM
6	4	603-0002-AL	ALLEN DRIVE DOG FASTENER KIT for TREAD PLATE ACCESS HATCH	SEE BOM	SEE BOM
7	4	4291903S	GAS SPRING BALL END	~	~
8	2	4291937	625-6-35-D2D2 GAS SPRING	STAINLESS STEEL	

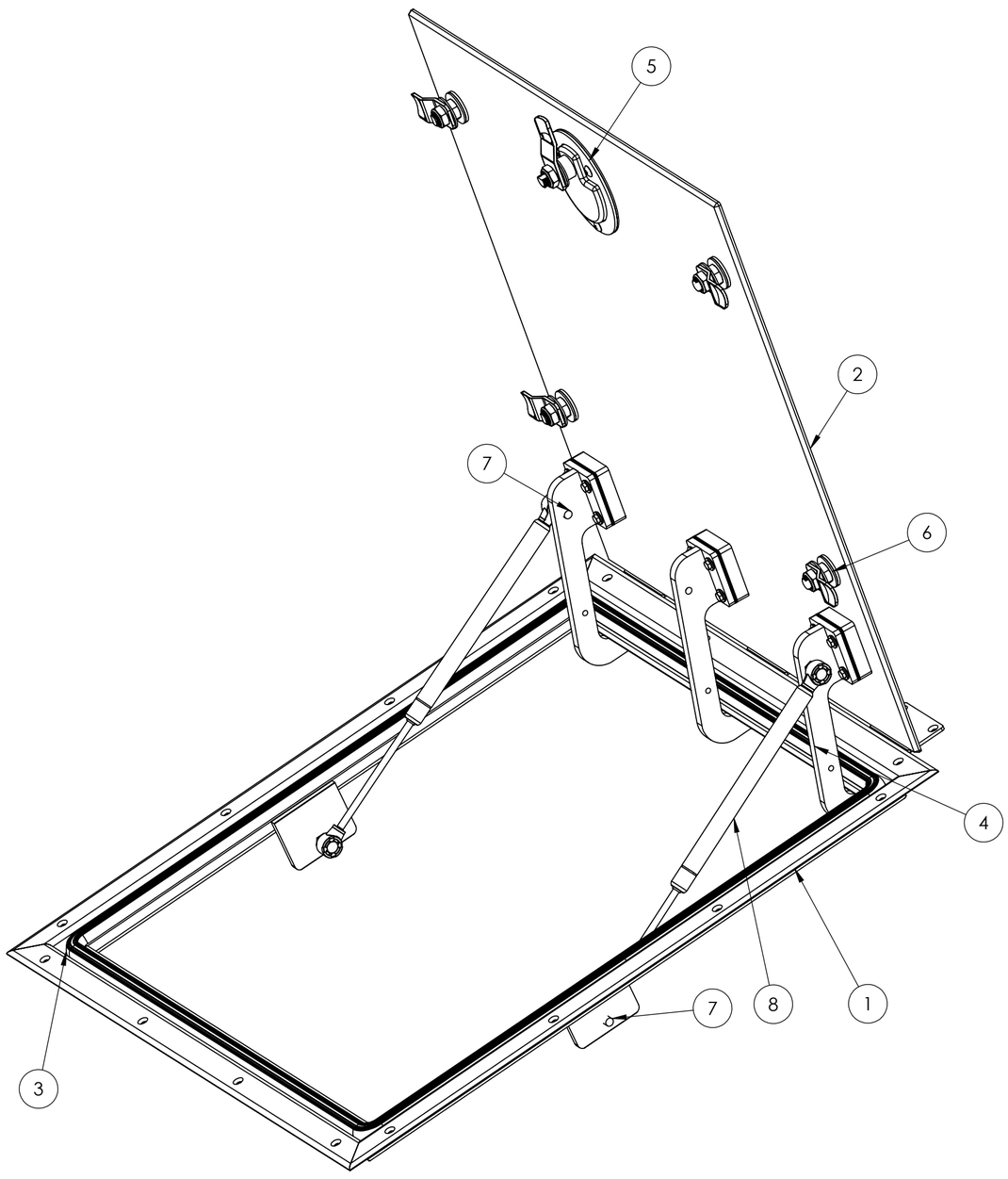

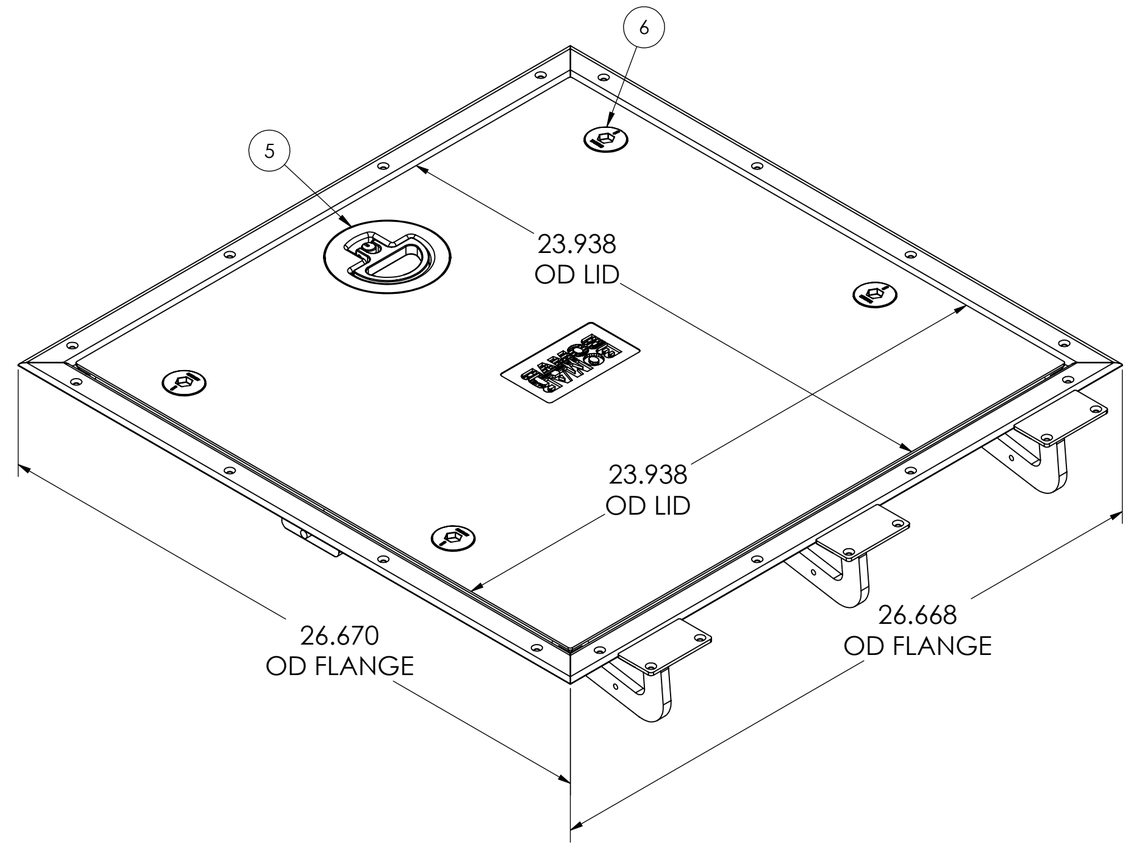

CUTOUT 24.50 X 24.50

S:\Bomar\Dept-Hatch\4000 Tread Plate Access Hatch\N40132\N40132SH-18-1----001

CUSTOMER

PROJECT

This Drawing is the Property of Pompanette LLC

All Rights Reserved, This Drawing and Information May Not Be Copied or Disclosed to Others Without Written Premission of Pompanette LLC

Pompanette

CHARLESTOWN, N.H.
PH. (603) 826 5791

TAMPA, FL.
(813) 885-2182

DESCRIPTION: TREAD PLATE ACCESS HATCH, SWING OUT HINGE W/ GAS SPRINGS

MATERIAL	DRAWN BY	DRAWN DATE	SHEET
SEE BOM	DO	12/26/2019	1 OF 1

CHECKED BY/DATE	SIZE	PART NUMBER	REVISION
	C	N40132SH-18-1----001	

DO NOT SCALE