ITEM NO.	QTY.	PART NO.	DESCRIPTION	MATERIAL	STOCK SIZE
1	1	W1800-10A-BASEN	LOW PRO HATCH BASE	50155070 EXTRUSION	XX LG
2	1	W1700-10AX-TOPN	SST HATCH SERIES LOW PRO TOP	50160200 EXTRUSION	XX
3	1	4391700	TEMPERED GLASS LENS	6mm TEMPERED GLASS	9-19/64 x 9-19/64
4	1	50582830	SST HATCH LOW-PRO LENS GASKET	50582830 GASKET	XX
5	1	4352203	ADHESIVE ULTRAGLAZE BLACK	SSG 4000	~
6	1	50582835	GASKET TAPE	1/4 x 1/4 THK	XX LG
7	2	4292701	SST LOW-PRO CONTOUR HINGE	316 SST, INV CAST	~
8	1	11209	I/O HANDLE CONTOUR	SEE BOM	~
9	1	4300136	RT HAND CONTOUR DOG HANDLE	33% GLASS NYLON	~
10	3	4300141	SPACER-1/16 THK	33% GLASS FILLED NYLON	~
11	1	4300137	LOCK LEVER	GRAY 33% GLASS FILLED NYLON	~
12	1	4300139	SCREW COVER-LOCKING CONTOUR DOG	33% GLASS FILLED NYLON	~
13	1	20-6013	WASHER #10 EXTERNAL LOCK	18-8 SST	~
14	1	4221976-SS	SCR PH PN HD #10-24 X 1-1/2 LG	SST	~
15	8	4221953	SCR PH PN HD #8-32 x 3/16 LG	~	~
16	2	4221980	SCR PH PN HD #8-32 x 1/4 LG	~	~
17	4	4221961A	SCREW, PH PAN HD #10-24 X 3/8 LG SELF TAP	BLACK OXIDE	~
18	1	4310115	DOG CATCH SST SERIES	33% GLASS FILLED NYLON	~
19	1	15351 R-1	RISER ARM_SST 7.00_BLOCK_MOD SMALL COLLET_MOD NUT	SEE BOM	~

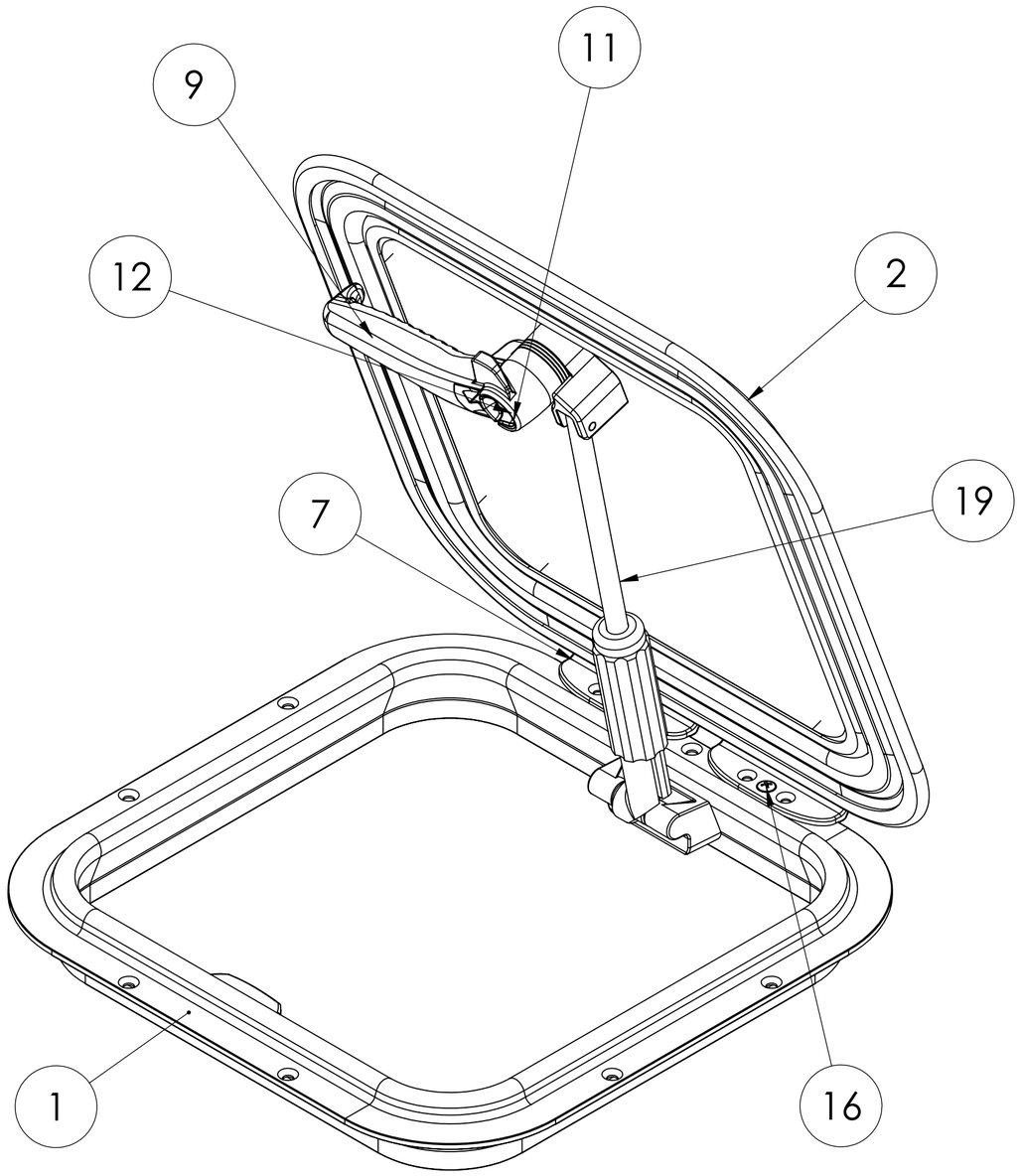

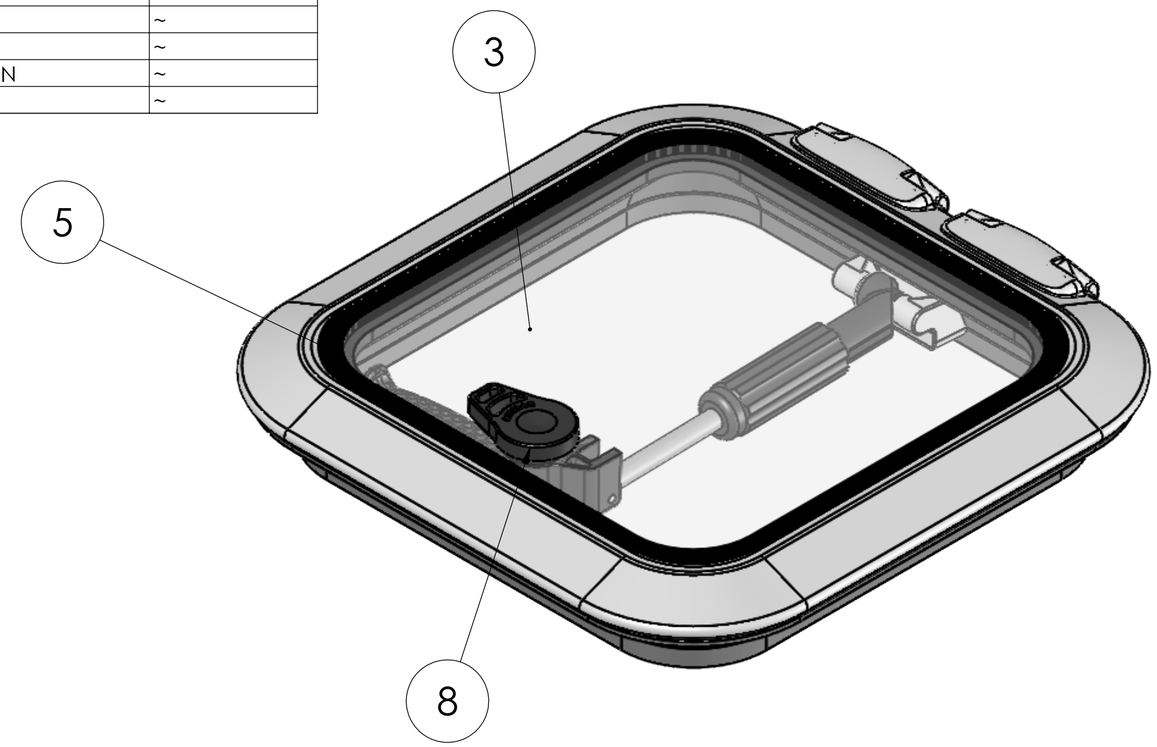

THIS DRAWING IS THE PROPERTY OF POMPANETTE LLC CHARLESTOWN, N.H. ALL RIGHTS ARE RESERVED. THIS DRAWING AND INFORMATION MAY NOT BE COPIED OR DISCLOSED TO OTHERS WITHOUT WRITTEN PERMISSION OF POMPANETTE LLC

DIV. OF Pompanette INC.
73 SOUTHWEST ST. PO BOX 1200
CHARLESTOWN, N.H. 03603
PH. (603) 826 5791
FAX (603) 826 3074

TOLS: ±1/64 FRACT.	TITLE: SST LOW-PRO TOP/ ALUM BASE HATCH			
.XXX =±.005 DEC: .XX=±.01	MATL: SEE BOM		DRAWN BY: JPERRY	1 OF 5
±1° DEG.	1:2 SCALE	© SIZE	9/25/07 DATE	PART NO.: S1800-10A----T

S:\Bomar\Dept-Hatch\1800 SST LOW-PRO TOP ALUM BASE\S1800\S1800-10A----T

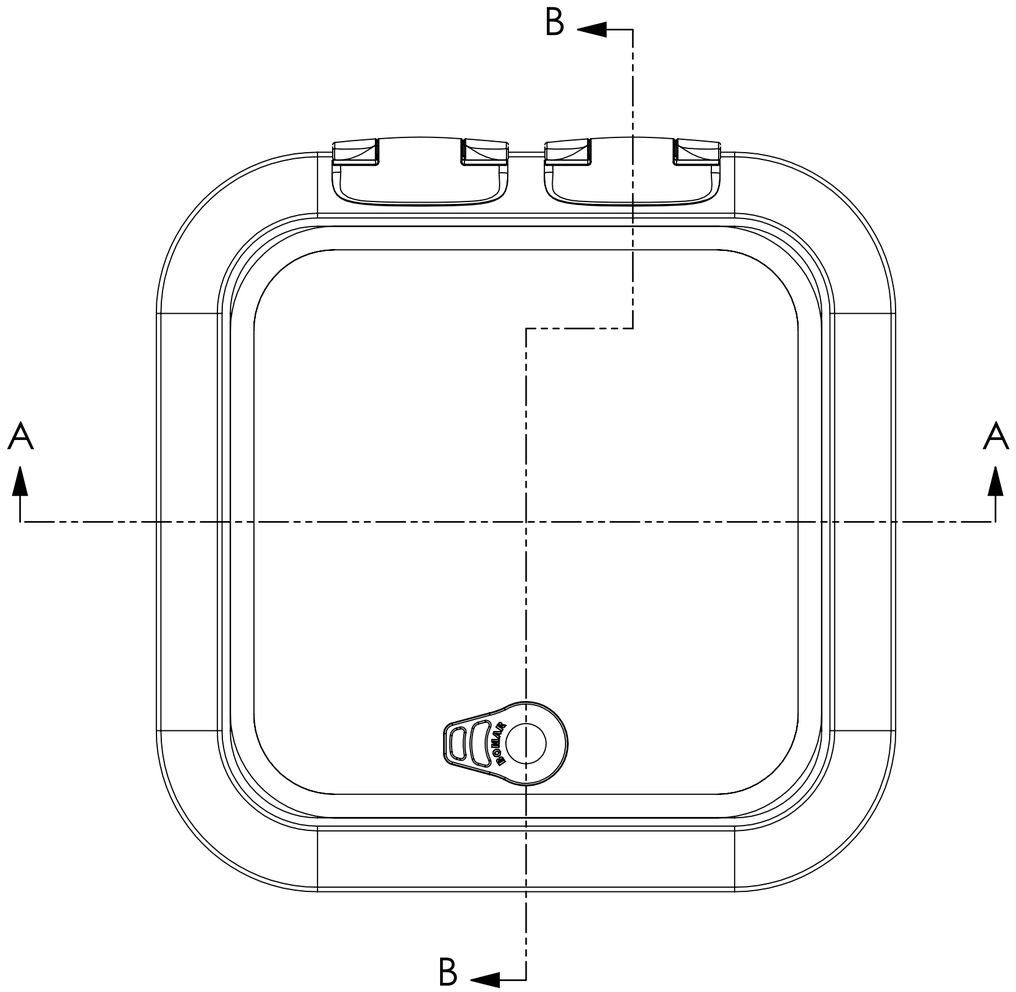

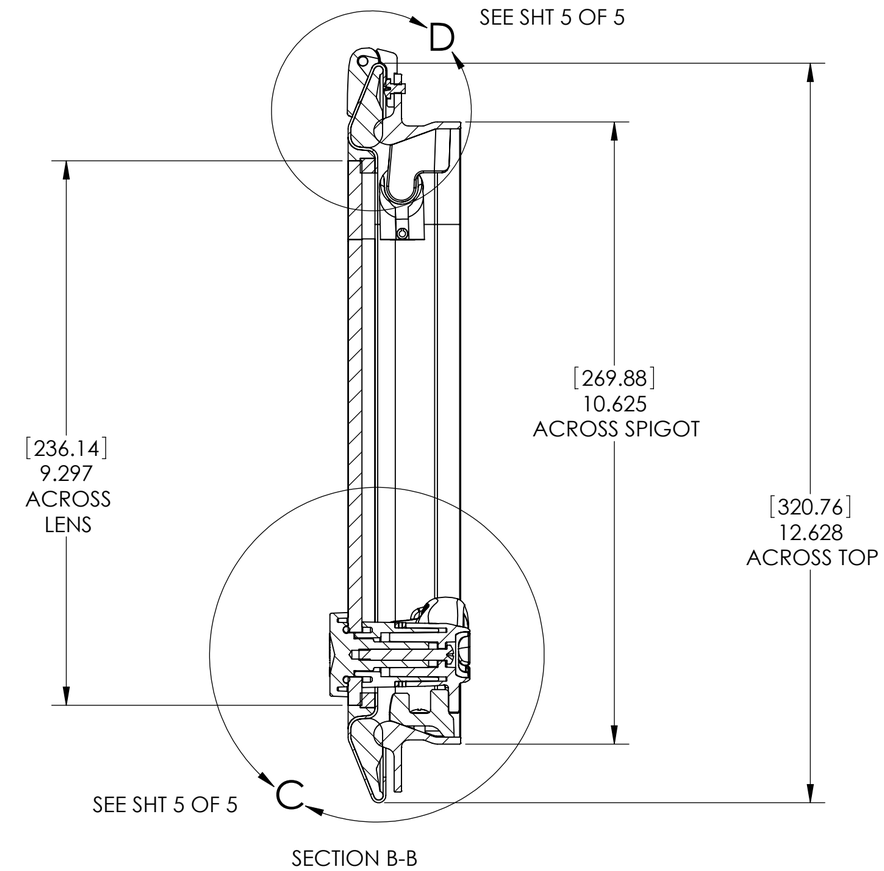

SECTION B-B

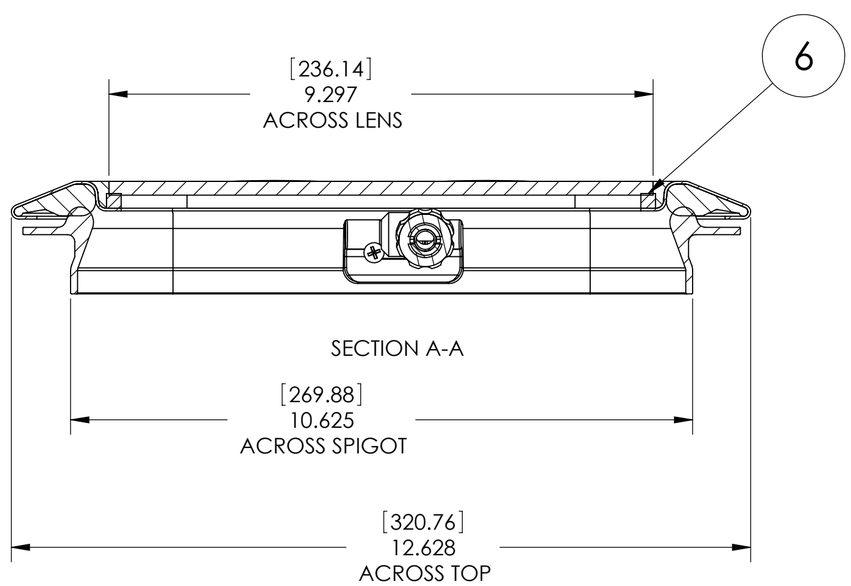

SECTION A-A

THIS DRAWING IS THE PROPERTY OF POMPANETTE LLC CHARLESTOWN, N.H. ALL RIGHTS ARE RESERVED. THIS DRAWING AND INFORMATION MAY NOT BE COPIED OR DISCLOSED TO OTHERS WITHOUT WRITTEN PERMISSION OF POMPANETTE LLC

BOMAR
DIV. OF Pompanette INC.
73 SOUTHWEST ST. PO BOX 1200
CHARLESTOWN, N.H. 03603
PH. (603) 826 5791
FAX (603) 826 3074

TOLS: ±1/64 FRACT.	TITLE: SST LOW-PRO TOP/ ALUM BASE HATCH			
.XXX =±.005 .XX=±.01 DEC.	MATL.: SEE BOM		DRAWN BY: JPERRY	2 OF 5
±1° DEG.	SCALE: 1:2	SIZE: ©	DATE: 9/25/07	PART NO.: S1800-10A----T

S:\Bomar\Dept-Hatch\1800 SST LOW-PRO TOP ALUM BASE\S1800\S1800-10A----T

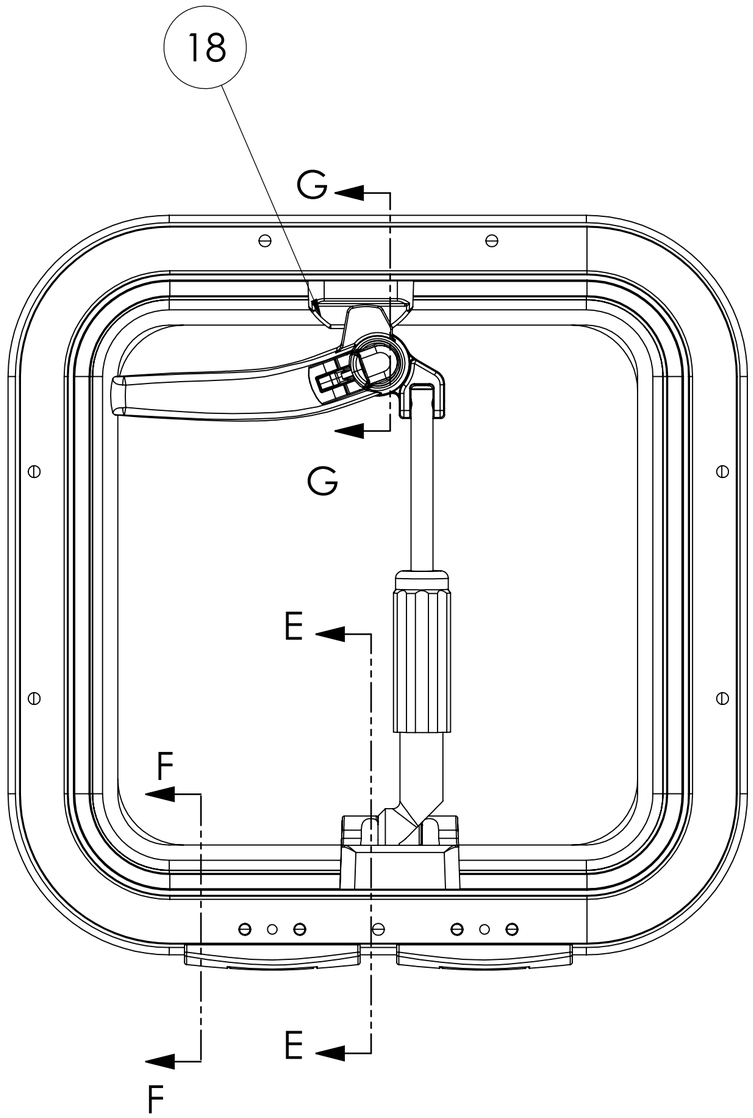

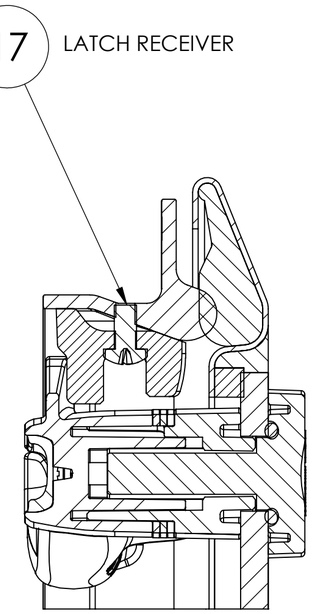

SECTION G-G
SCALE 1 : 1

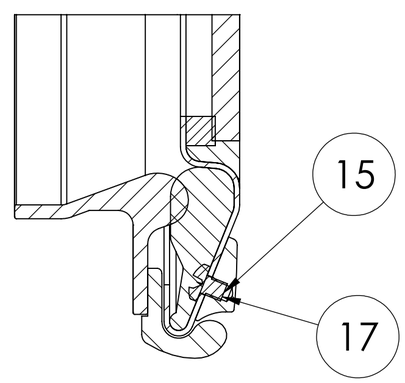

SECTION F-F
SCALE 1 : 1

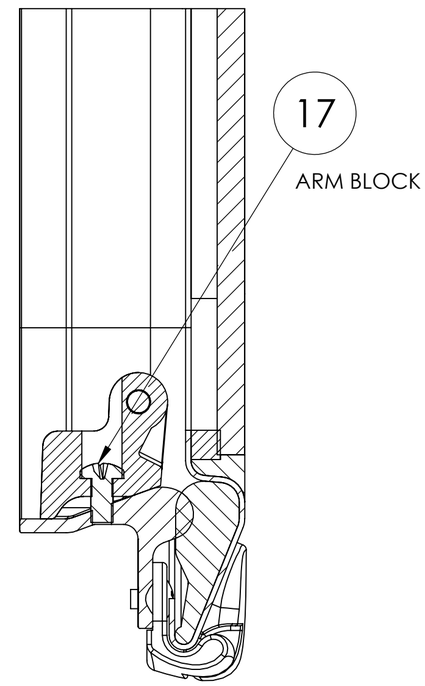

SECTION E-E
SCALE 1 : 1

THIS DRAWING IS THE PROPERTY OF POMPANETTE LLC CHARLESTOWN, N.H. ALL RIGHTS ARE RESERVED. THIS DRAWING AND INFORMATION MAY NOT BE COPIED OR DISCLOSED TO OTHERS WITHOUT WRITTEN PERMISSION OF POMPANETTE LLC

DIV. OF Pompanette INC.
73 SOUTHWEST ST. PO BOX 1200
CHARLESTOWN, N.H. 03603
PH. (603) 826 5791
FAX (603) 826 3074

TOLS. ±1/64 FRACT.	TITLE SST LOW-PRO TOP/ ALUM BASE HATCH			
.XXX =±.005 DEC. .XX=±.01	MATL. SEE BOM		DRAWN BY JPERRY	3 OF 5
±1° DEG.	1:2 SCALE	© SIZE	9/25/07 DATE	PART NO. S1800-10A----T

S:\Bomar\Dept-Hatch\1800 SST LOW-PRO TOP ALUM BASE\S1800\S1800-10A----T

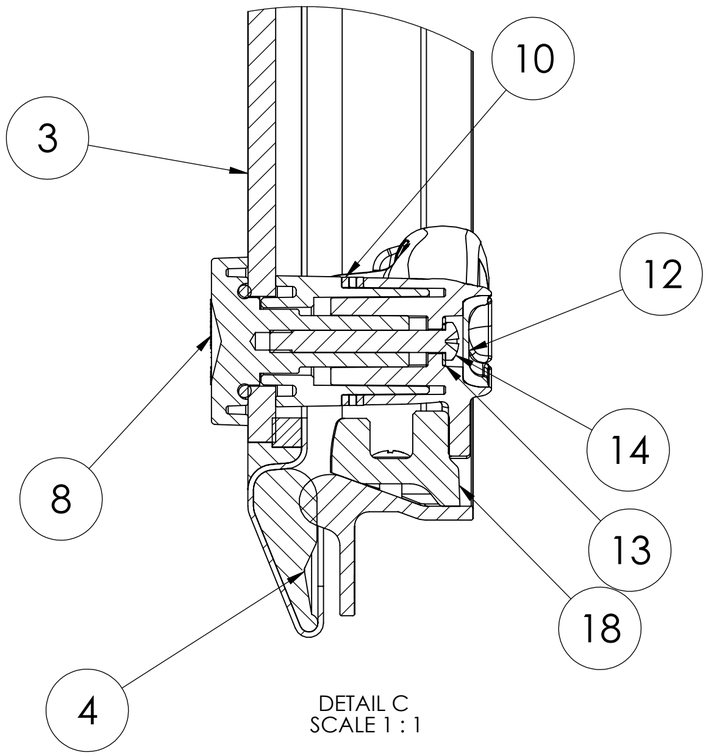

DETAIL C
SCALE 1 : 1

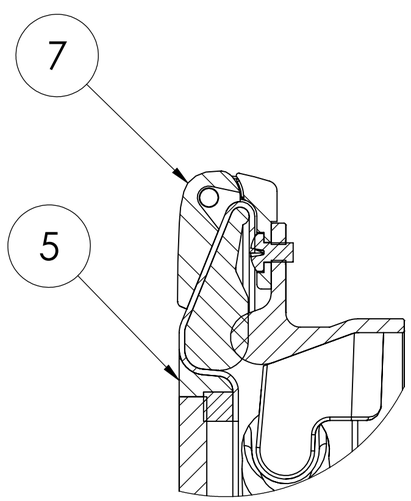

DETAIL D
SCALE 1 : 1

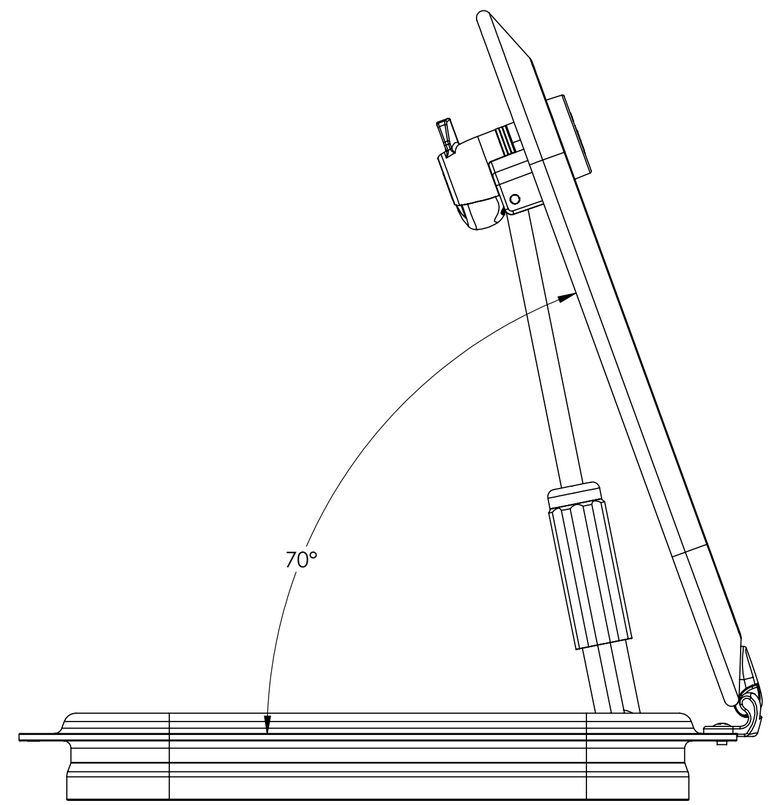

THIS DRAWING IS THE PROPERTY OF POMPANETTE LLC, CHARLESTOWN, N.H. ALL RIGHTS ARE RESERVED. THIS DRAWING AND INFORMATION MAY NOT BE COPIED OR DISCLOSED TO OTHERS WITHOUT WRITTEN PERMISSION OF POMPANETTE LLC

DIV. OF Pompanette INC.
73 SOUTHWEST ST. PO BOX 1200
CHARLESTOWN, N.H. 03603
PH. (603) 826 5791
FAX (603) 826 3074

TOLS: ±1/64 FRACT.	TITLE: SST LOW-PRO TOP/ ALUM BASE HATCH			
.XXX =±.005 DEC: .XX=±.01	MATL. SEE BOM		DRAWN BY: JPERRY	4 OF 5
±1° DEG.	1:2 SCALE	© SIZE	9/25/07 DATE	PART NO. S1800-10A----T

S:\Bomar\Dept-Hatch\1800 SST LOW-PRO TOP ALUM BASE\S1800\S1800-10A----T