ITEM NO.	QTY.	PART NO.	DESCRIPTION	MATERIAL	STOCK SIZE
1	1	W2680-10A-BASE-2	VOYAGER FLUSH MOUNT HATCH BASE	50156207	70.0" LG
2	1	W2680-10AX-TOPN	VOYAGER SERIES HATCH TOP	50160100 EXTRUSION	74.0 LG
3	1	2326802-2	ACRYLIC LENS	9mm SMOKED ACRYLIC	9mm X 18-3/4 X 18-3/4
4	2	4292915	INVESTMENT CAST HINGE ASSY	SEE BOM	~
5	4	4221963	SCR PH FL HD 10-32X5/16 LG	~	~
6	8	4221980	SCR PAN HD #8-32 X 1/4 LG	~	~
7	1	50582226	P-STYLE 9mm LENS GASKET	50582226 GASKET	72.0 LG
8	1	4350012	ADHESIVE, PRONTO CA40H	~	.003
9	1	4352203	ADHESIVE-BLACK ULTRA GLAZE SSG4000	~	~
10	2	11209	I/O HANDLE CONTOUR	SEE BOM	~
11	1	12095 R-1	RISER ARM ASSY	SEE BOM	~
12	1	4221960	SCREW, SELF TAPPING SHOULDER	18-8 SST	
13	4	4300140	SPACER-3/16" THK	33% GLASS FILLED NYLON	~
14	4	4300141	SPACER-1/16 THK	33% GLASS FILLED NYLON	~
15	1	4300136	RT HAND CONTOUR DOG HANDLE	33% GLASS NYLON	~
16	2	20-6013	WASHER #10 EXTERNAL LOCK	18-8 SST	~
17	2	4221976-SS	SCR PH PN HD #10-24 X 1-1/2 LG	SST	~
18	1	4300139	SCREW COVER-LOCKING CONTOUR DOG	33% GLASS FILLED NYLON	~
19	1	4300137	LOCK LEVER	GRAY 33% GLASS FILLED NYLON	~
20	1	4300135	LH CONTOUR HANDLE	33% GLASS FILL NYLON	~
21	1	4300123	NON LOCKING SLEEVE	33% GLASS FILLED NYLON	~
22	1	4300138	SCREW COVER, NON LOCKING	33% GLASS-FILLED NYLON	~

REV.	DESCRIPTION	APPROVED	DATE
A	CHANGED FROM ANDY HANDLE TO CONTOUR HANDLE		
B	CHANGED FROM CRUISING BASE TO FLUSH MOUNT BASE; RISER ARM CHANGED	JPERRY	8/29/13

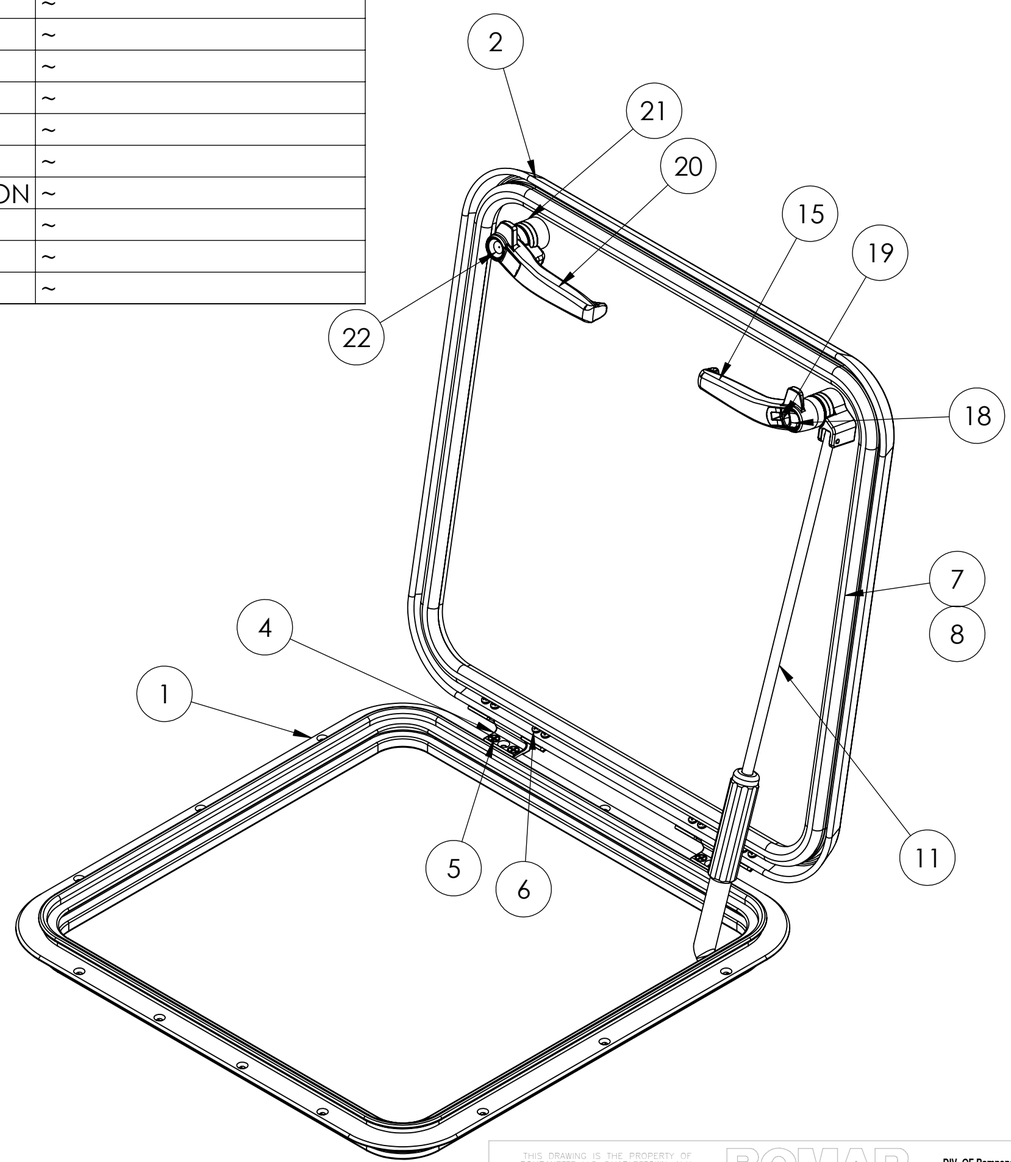

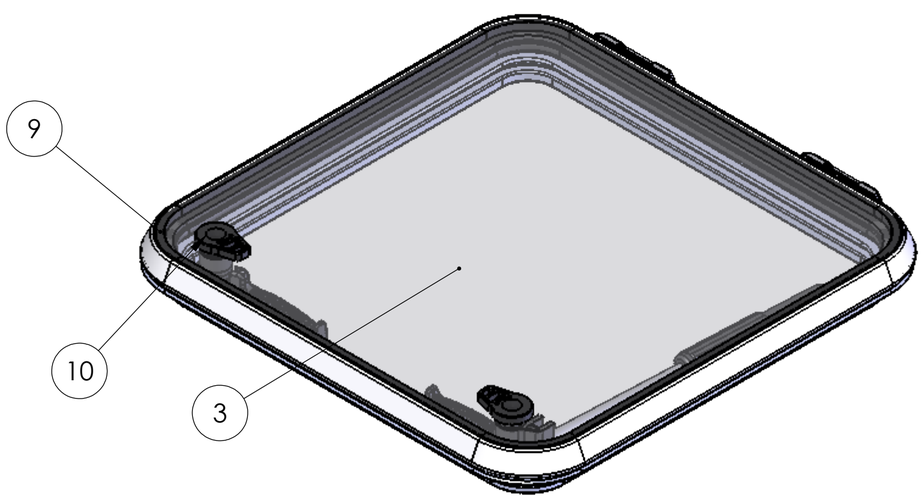

BOMAR RECOMMENDS
CUTOUT = 18-9/16 X 18-9/16
CUTOUT RADIUS = 1-11/16

THIS DRAWING IS THE PROPERTY OF POMPANETTE LLC, CHARLESTOWN, N.H. ALL RIGHTS ARE RESERVED. THIS DRAWING AND INFORMATION MAY NOT BE COPIED OR DISCLOSED TO OTHERS WITHOUT WRITTEN PERMISSION OF POMPANETTE LLC

DIV. OF Pompanette INC.
73 SOUTHWEST ST. PO BOX 1200
CHARLESTOWN, N.H. 03603
PH. (603) 826 5791
FAX (603) 826 3074

TOLS. ±1/64 FRACT.	VOYAGER HATCH SERIES TITLE			
.XXX =±.005 DEC: .XX=±.01	SEE BOM MATL.		JPERRY DRAWN BY	1 OF 4
±1° DEG.	1:4 SCALE	© SIZE	8/29/13 DATE	S2680-10AX PART NO.

S:\Bomar\Dept-Hatch\2600 STSTLHatch-Voyager with New Extrusion\Voyager Flush Mount Assembly Generic

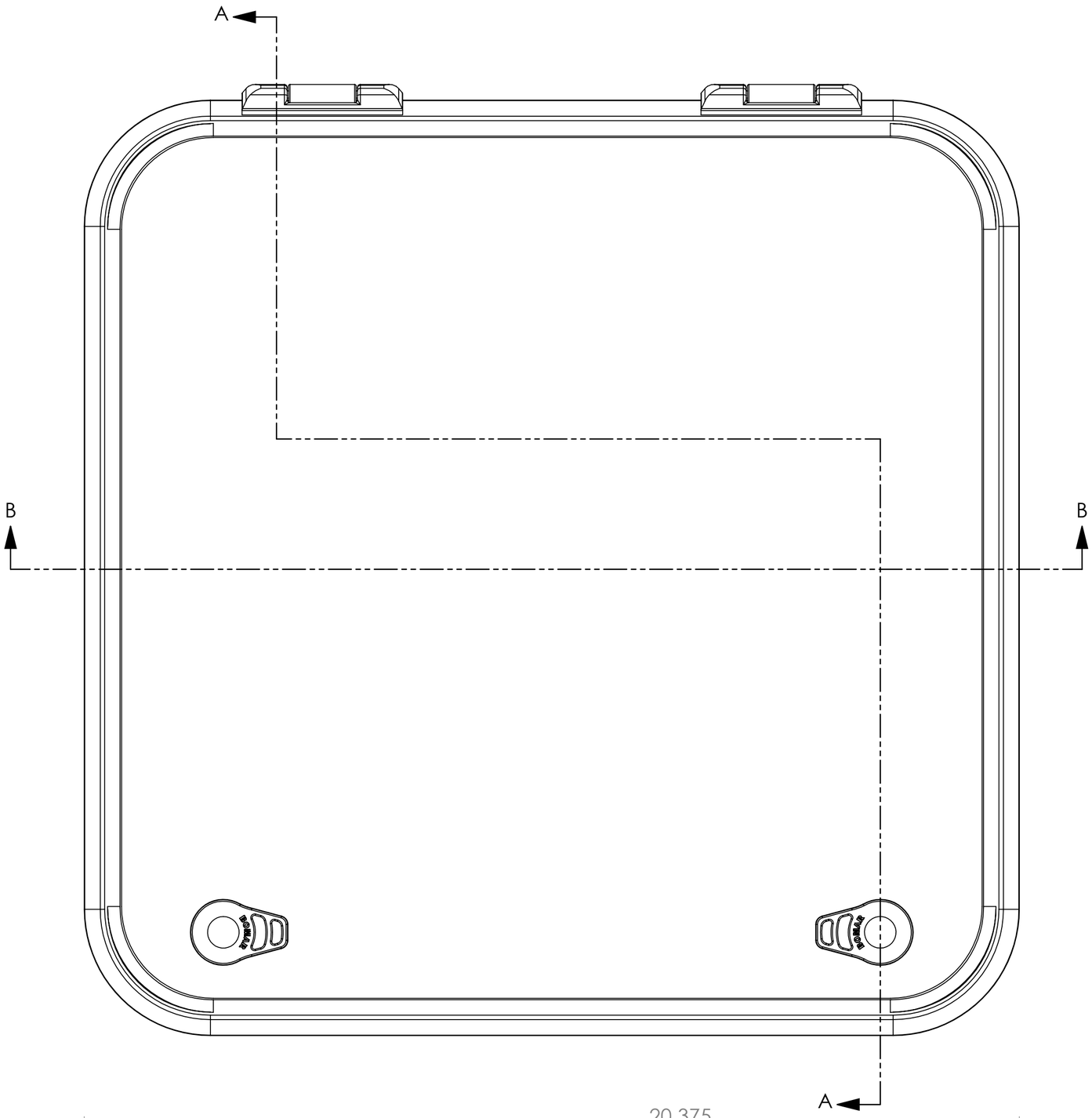

SECTION B-B

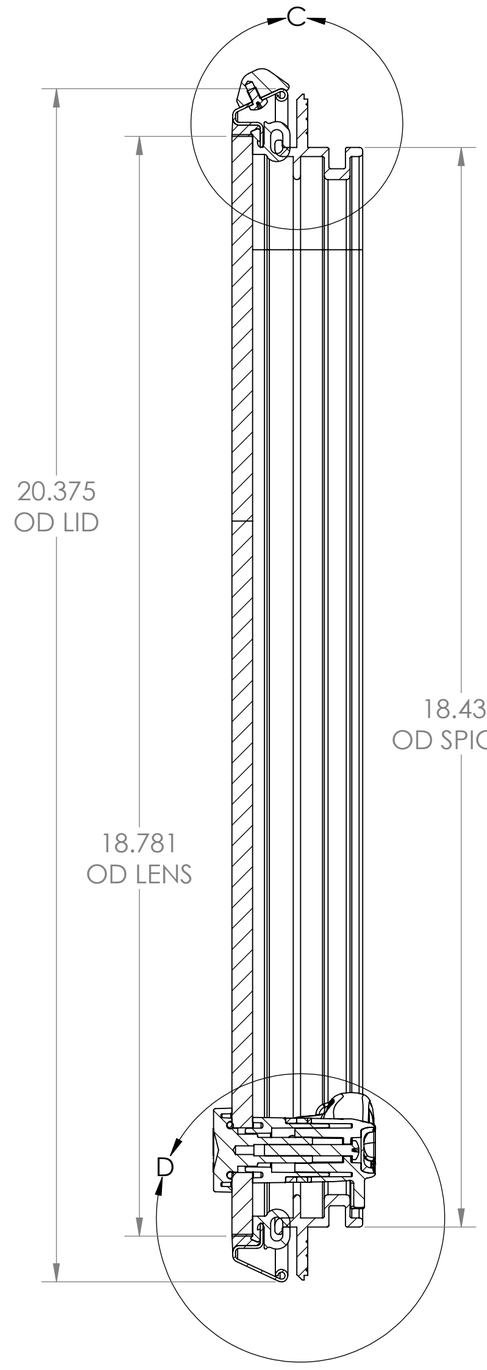

SECTION A-A

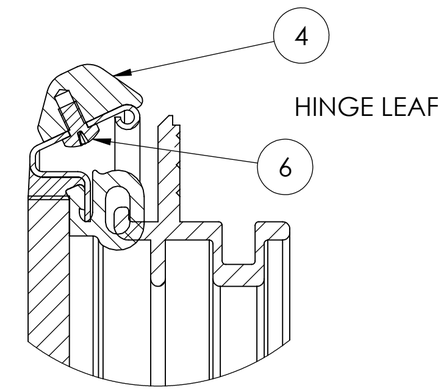

DETAIL C
SCALE 1 : 1

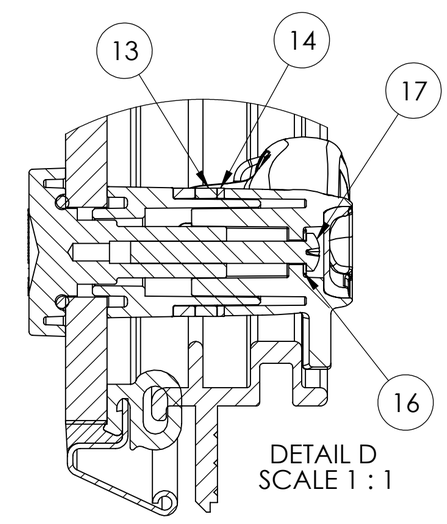

DETAIL D
SCALE 1 : 1

THIS DRAWING IS THE PROPERTY OF POMPANETTE, LLC., CHARLESTOWN, N.H. ALL RIGHTS ARE RESERVED. THIS DRAWING AND INFORMATION MAY NOT BE COPIED OR DISCLOSED TO OTHERS WITHOUT WRITTEN PERMISSION OF POMPANETTE, LLC.

DIV. OF Pompanette INC.
73 SOUTHWEST ST. PO BOX 1200
CHARLESTOWN, N.H. 03603
PH. (603) 826 5791
FAX (603) 826 3074

TOLS. ±1/64 FRACT.	TITLE: VOYAGER HATCH SERIES			
.XXX = ±.005 DEC: XX = ±.01	MATL.: SEE BOM		DRAWN BY: JPERRY	2 OF 4
±1° DEG.	SCALE: 1:2	SIZE: C	DATE: 8/29/13	PART NO.: S2680-10AX

S:\Bomar\Dept-Hatch\2600 STSTLHatch-Voyager with New Extrusion\Voyager Flush Mount Assembly Generic

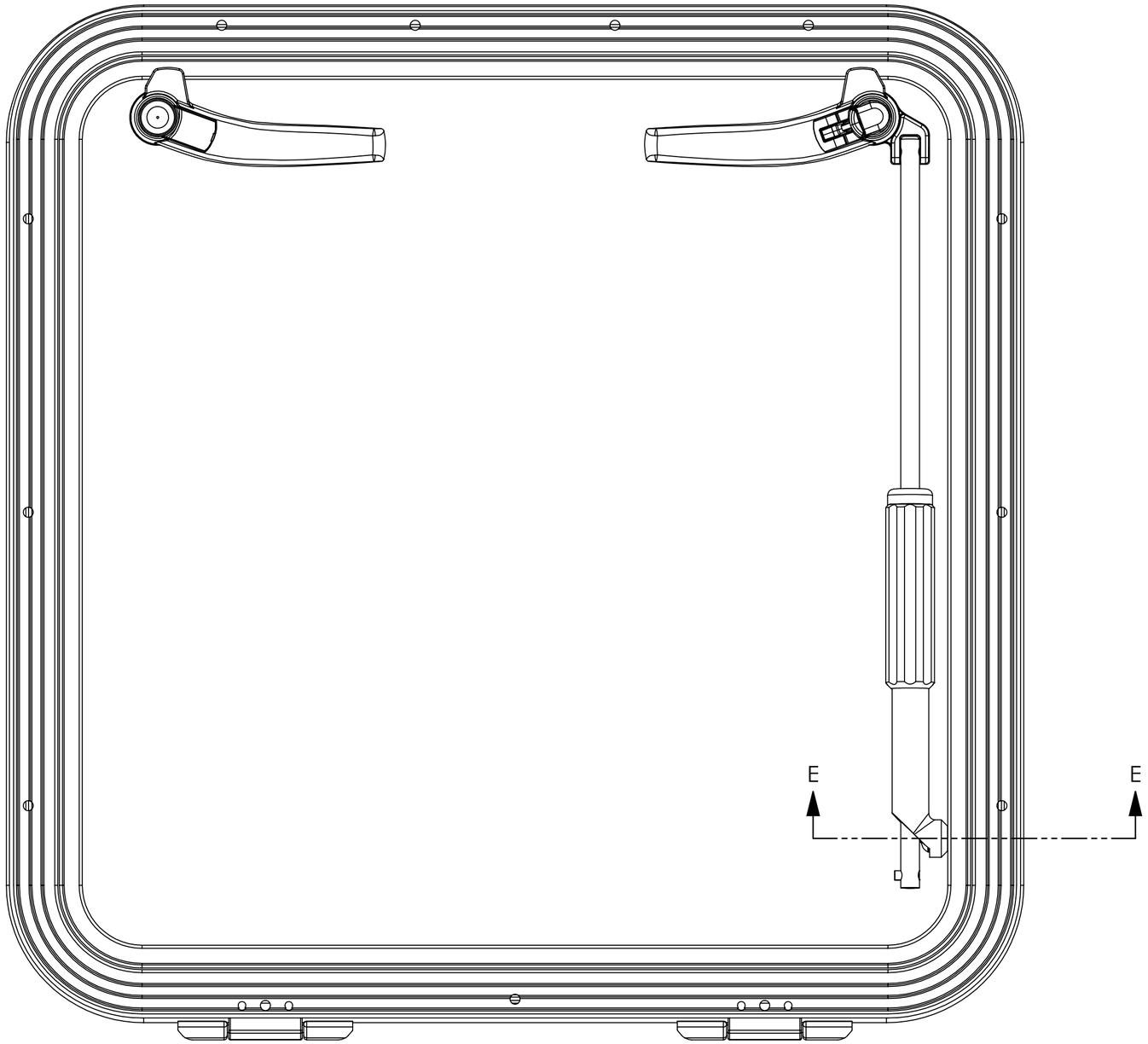

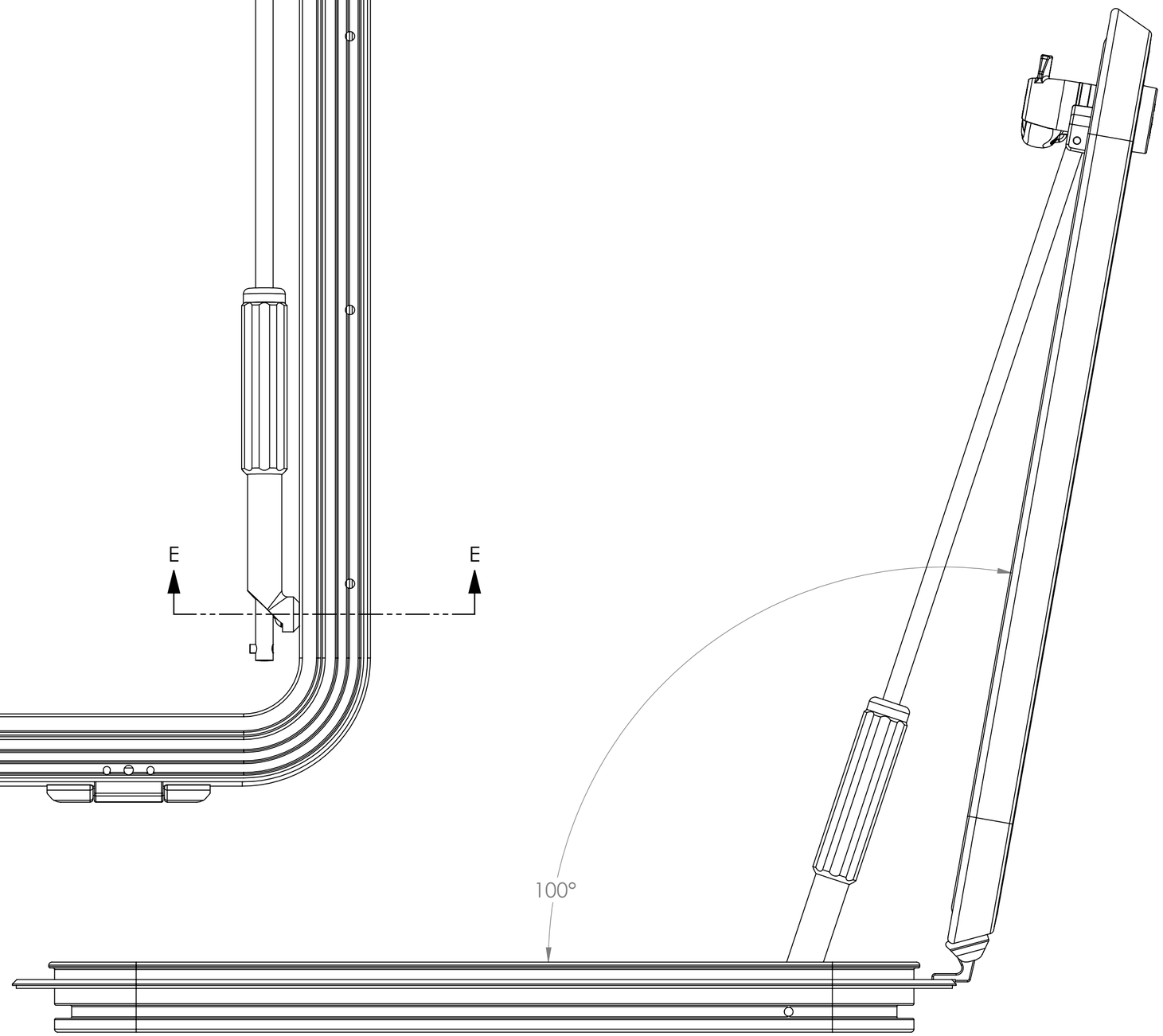

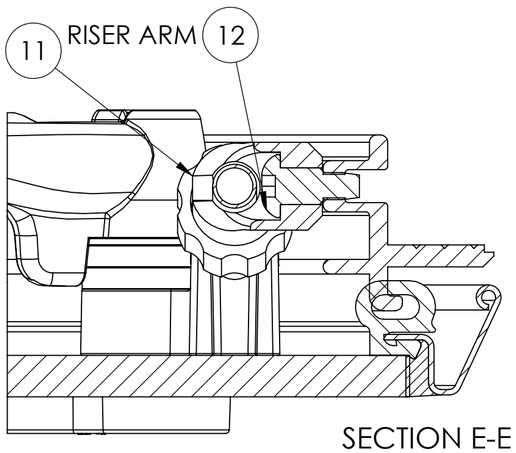

SECTION E-E
SCALE 1 : 1

THIS DRAWING IS THE PROPERTY OF POMPANETTE, LLC., CHARLESTOWN, N.H. ALL RIGHTS ARE RESERVED, THIS DRAWING AND INFORMATION MAY NOT BE COPIED OR DISCLOSED TO OTHERS WITHOUT WRITTEN PERMISSION OF POMPANETTE, LLC.

DIV. OF Pompanette INC.
73 SOUTHWEST ST. PO BOX 1200
CHARLESTOWN, N.H. 03603
PH. (603) 826 5791
FAX (603) 826 3074

TOLS. FRACT. ±1/64	TITLE: VOYAGER HATCH SERIES			
DEC: .XXX = ±.005, .XX = ±.01	MATL.: SEE BOM		DRAWN BY: JPERRY	3 OF 4
DEG. ±1°	SCALE: 1:2	SIZE: ©	DATE: 8/29/13	PART NO.: S2680-10AX

S:\Bomar\Dept-Hatch\2600 STSTLHatch-Voyager with New Extrusion\Voyager Flush Mount Assembly Generic